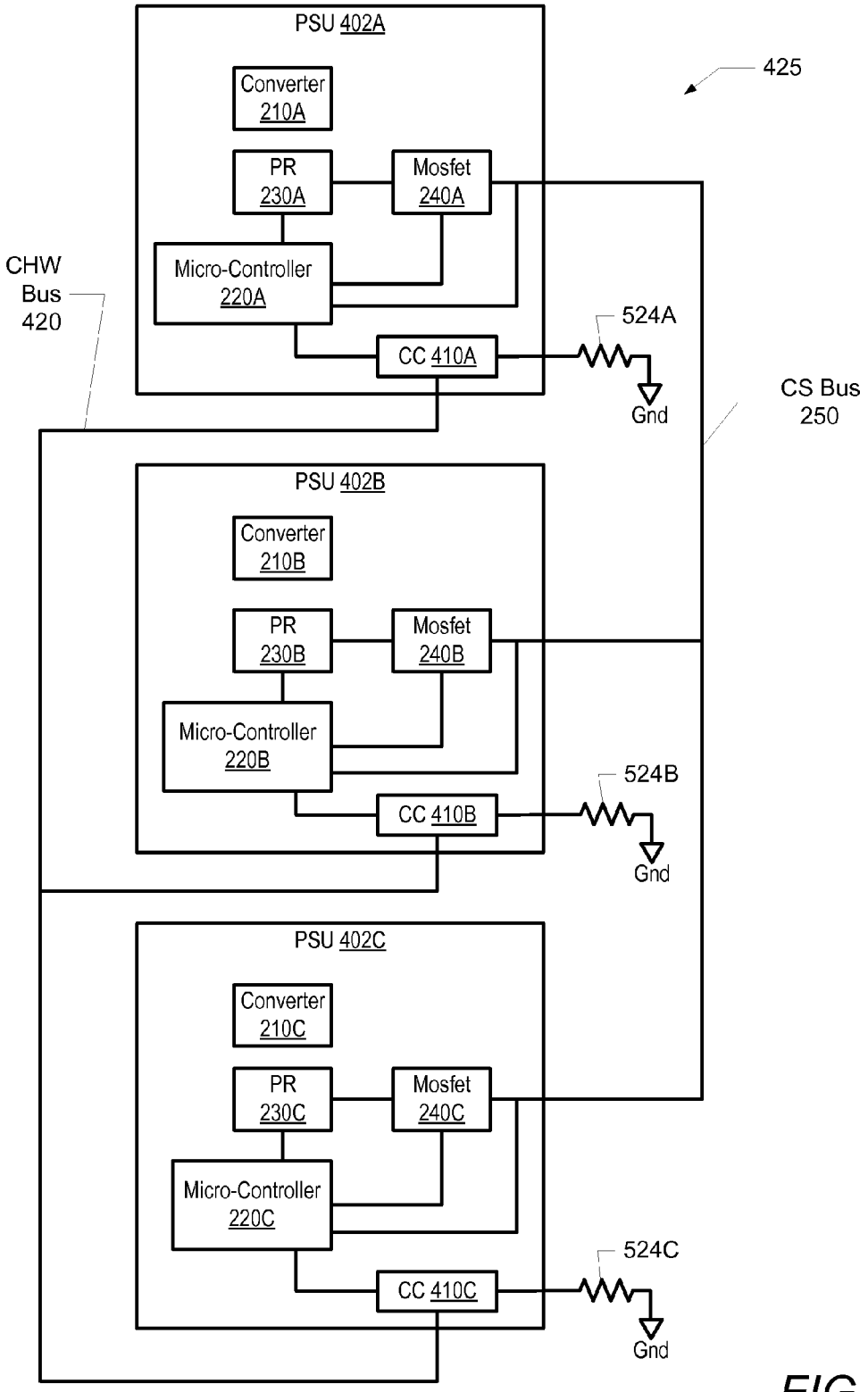
PSU 402A
Converter 210A
PR 230A
Mosfet 240A
Micro-Controller 220A
CC 410A
524A
Gnd
425
CHW Bus 420
CS Bus 250
PSU 402B
Converter 210B
PR 230B
Mosfet 240B
Micro-Controller 220B
CC 410B
524B
Gnd
PSU 402C
Converter 210C
PR 230C
Mosfet 240C
Micro-Controller 220C
CC 410C
524C
Gnd

FIG. 4