FIG.26(A)

PRIOR ART

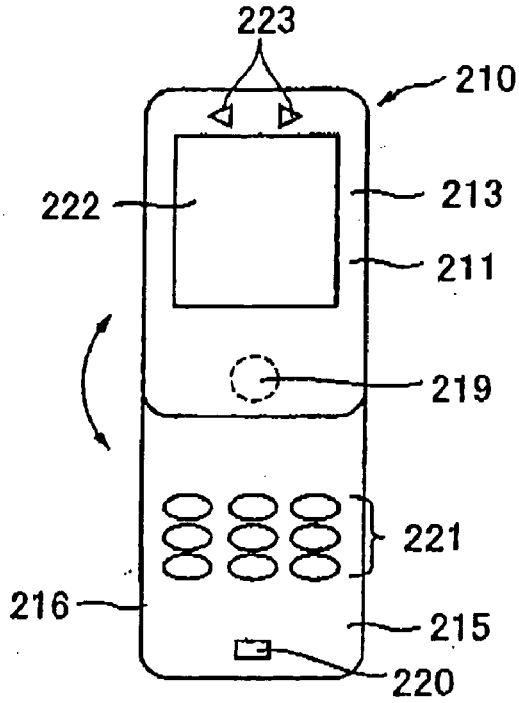
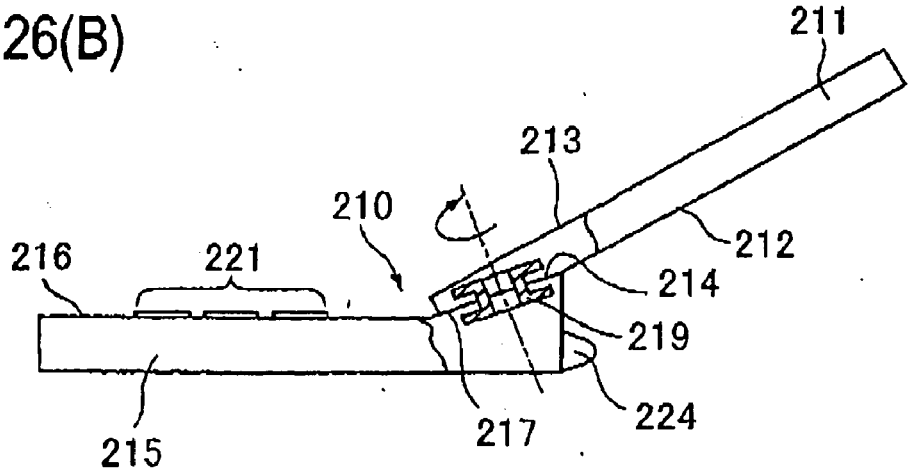
FIG.26(B)