FIG.2(A) FIG.2(B) FIG.2(C)

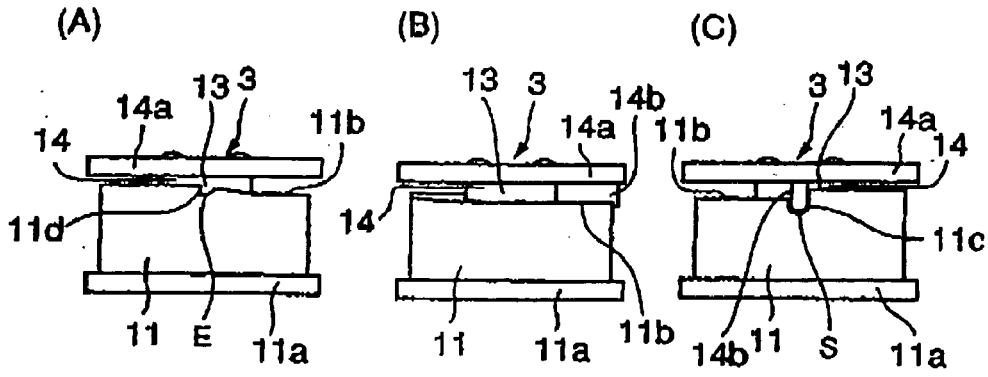
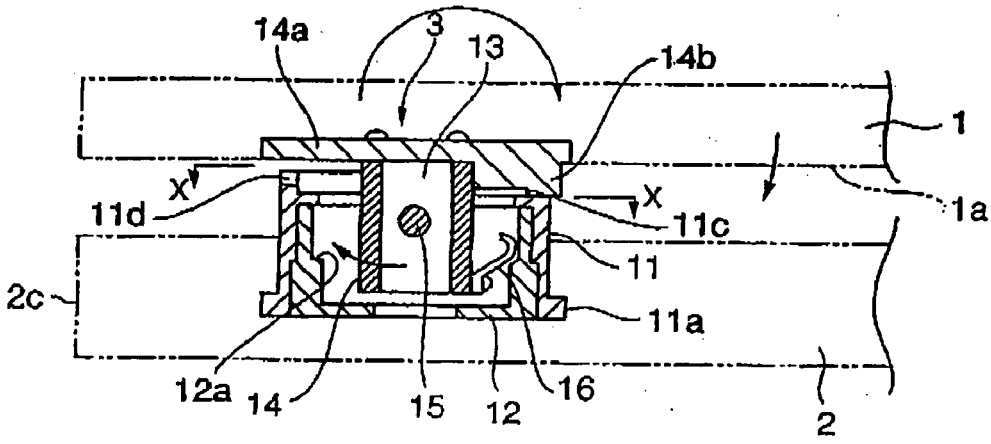
FIG.3