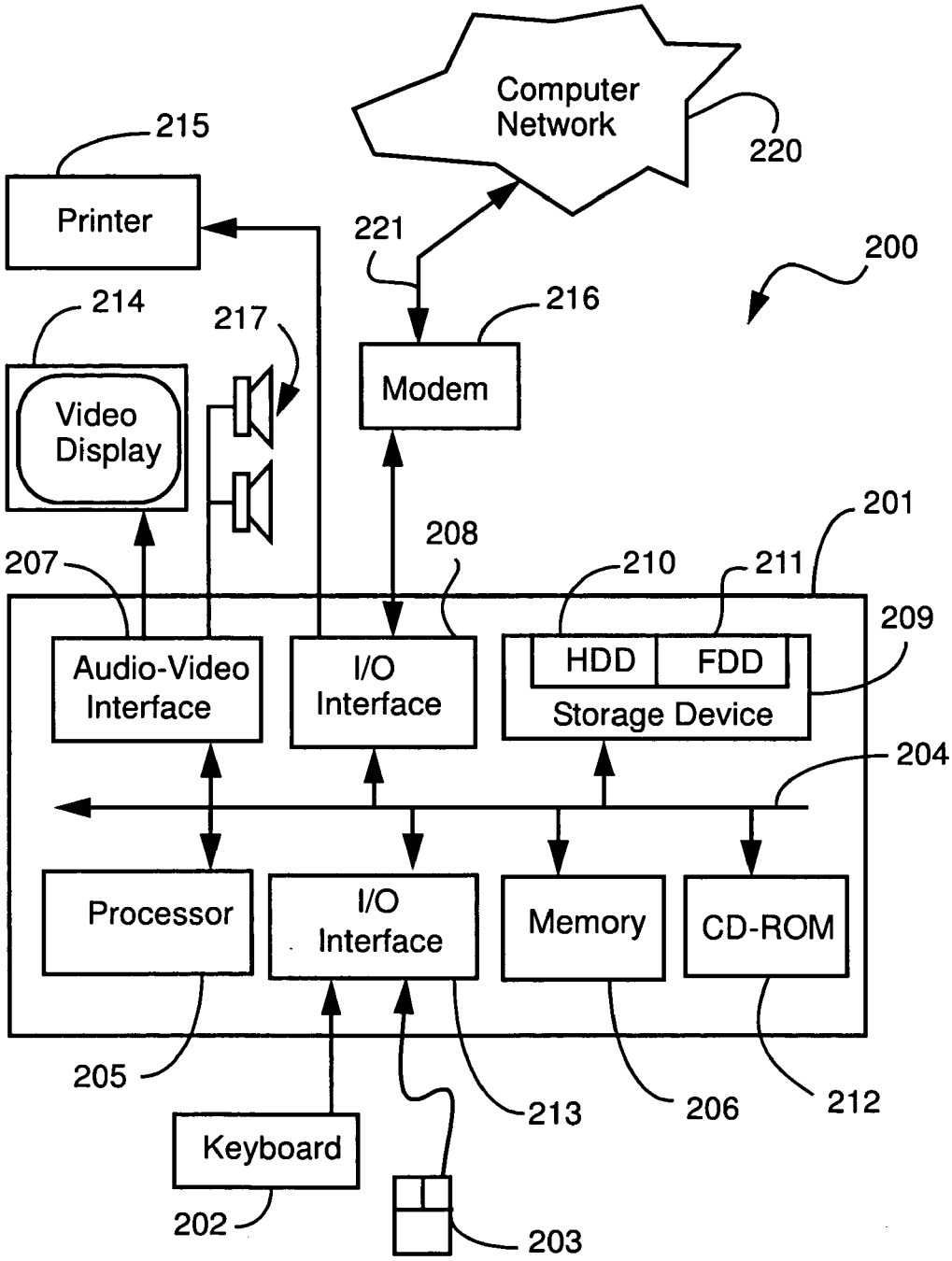
Computer Network
220
215
Printer
221
200
214
217
216
Video Display
Modem
201
208
207
210
211
209
Audio-Video Interface
I/O Interface
HDD
FDD
Storage Device
204
Processor
I/O Interface
Memory
CD-ROM
205
213
206
212
Keyboard
202
203

Fig. 2