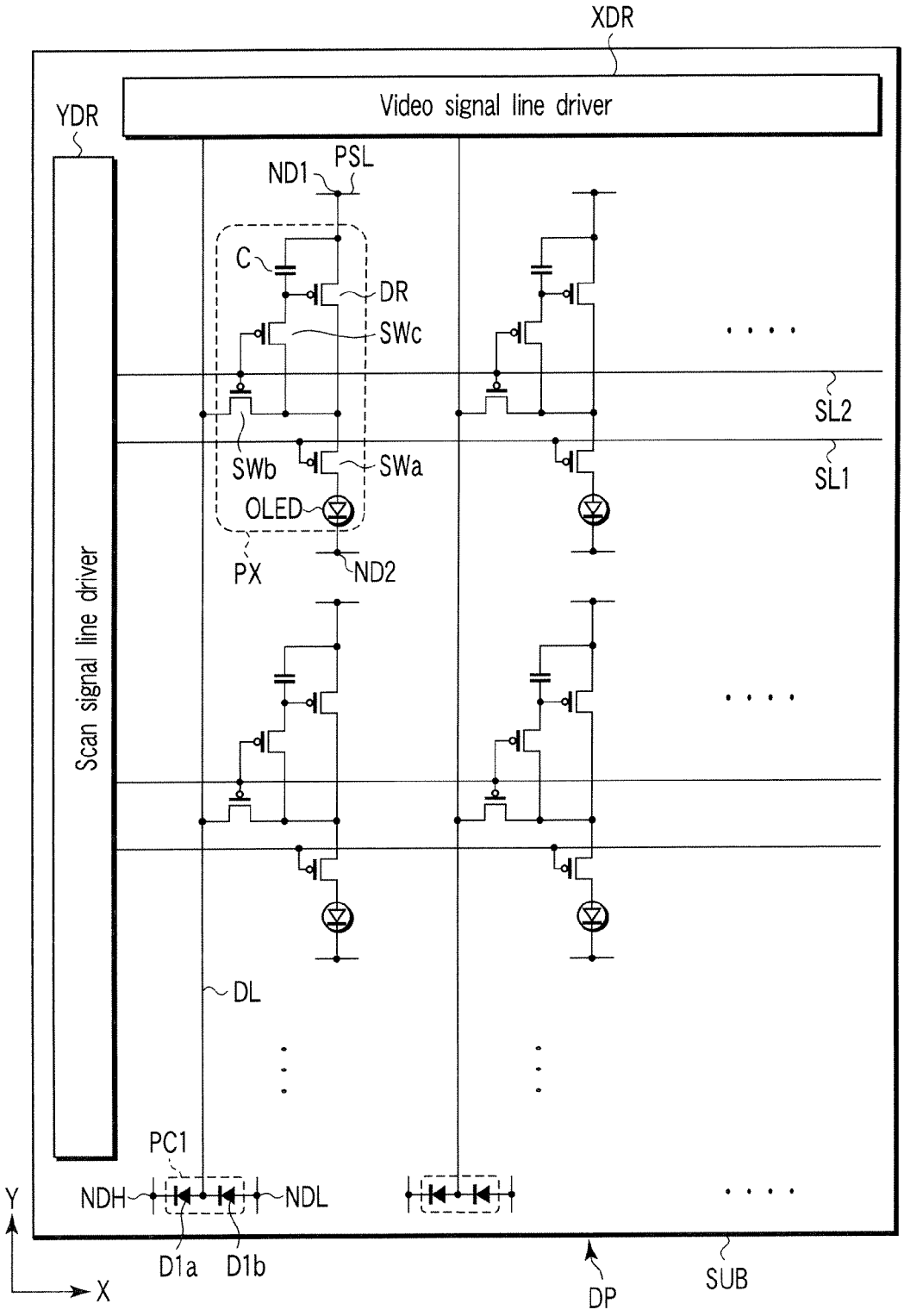
XDR
Video signal line driver
YDR
Scan signal line driver
ND1
PSL
C
DR
SWc
SWb
SWa
OLED
PX
ND2
SL2
SL1
DL
PC1
NDH
NDL
D1a
D1b
Y
X
DP
SUB

FIG. 1