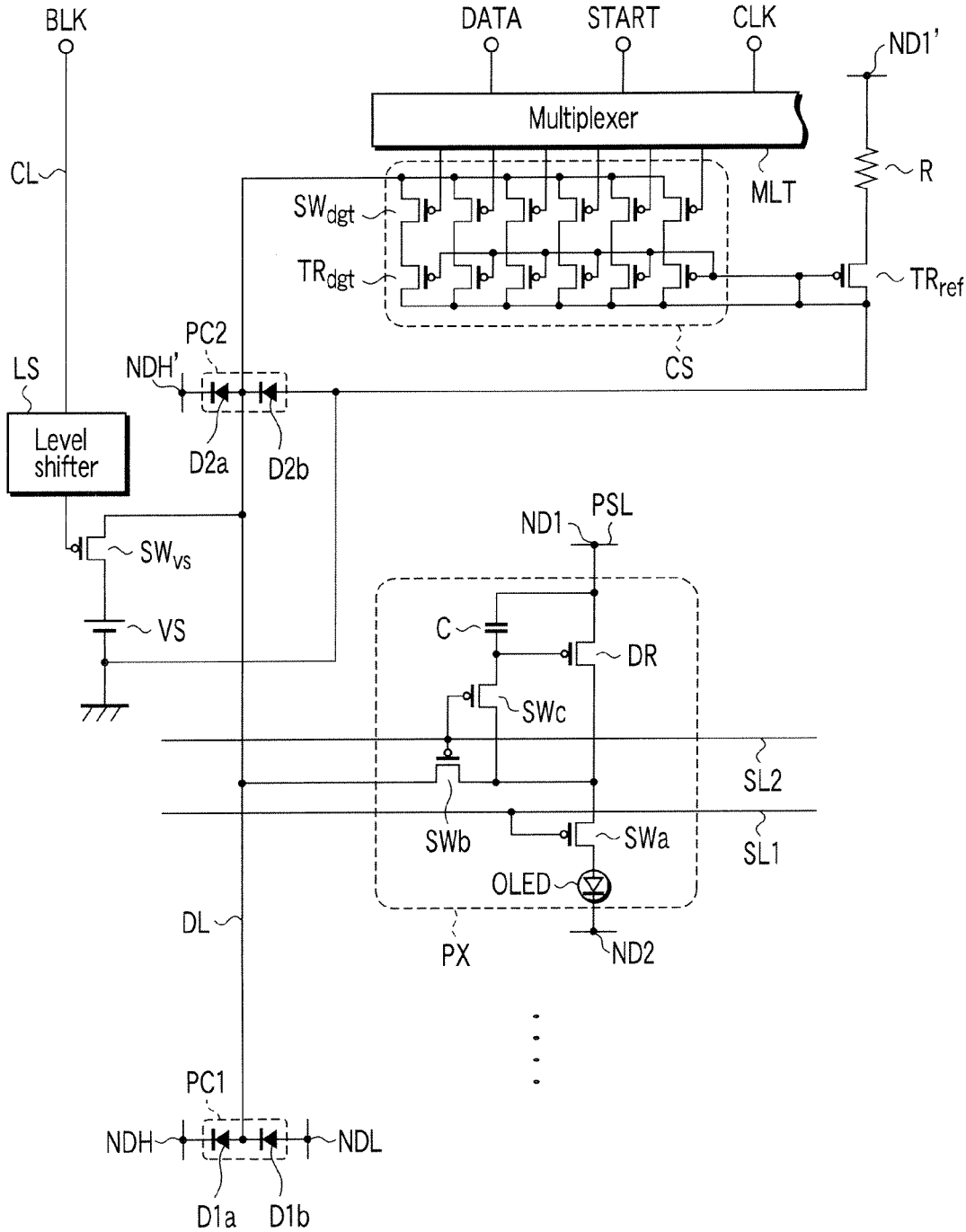
BLK
DATA
START
CLK
ND1'
Multiplexer
CL
MLT
R
SWdgt
TRdgt
TRref
CS
PC2
NDH'
LS
Level shifter
D2a
D2b
PSL
ND1
SWvs
VS
C
DR
SWc
SL2
SWb
SWa
SL1
OLED
DL
PX
ND2
PC1
NDH
NDL
D1a
D1b

FIG. 5