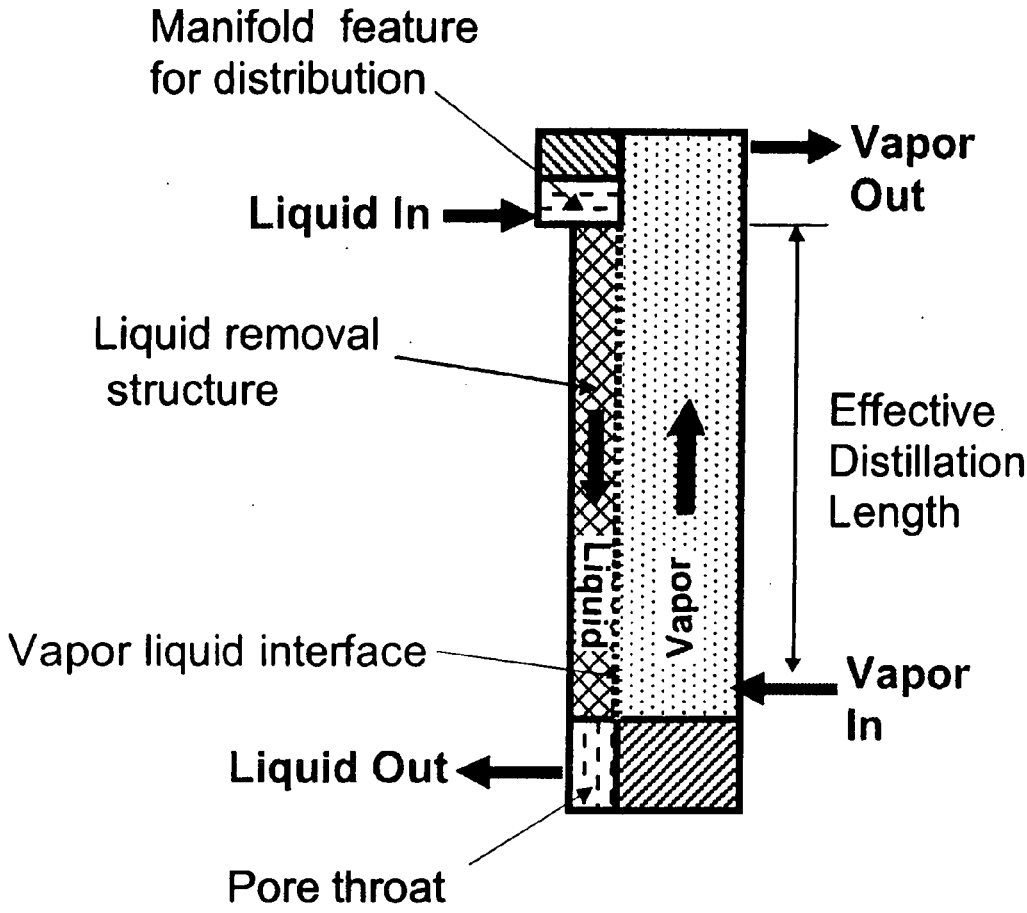
Manifold feature
for distribution
Vapor
Out
Liquid In
Liquid removal
structure
Effective
Distillation
Length
Liquid
Vapor
Vapor liquid interface
Vapor
In
Liquid Out
Pore throat

FIG. 43

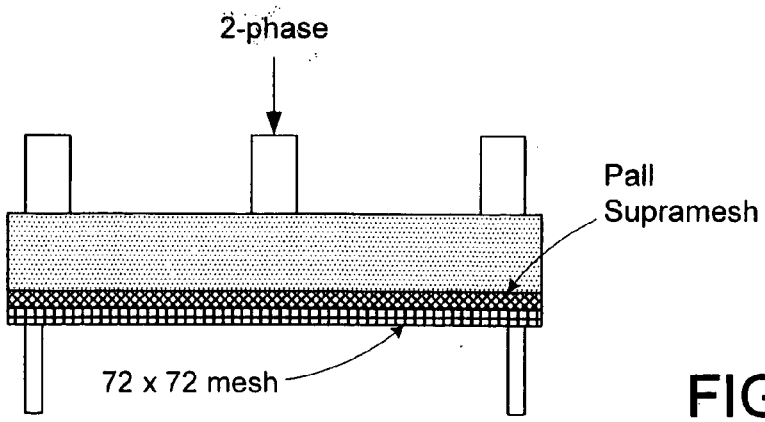
2-phase
Pall
Supramesh
72 x 72 mesh

FIG. 44