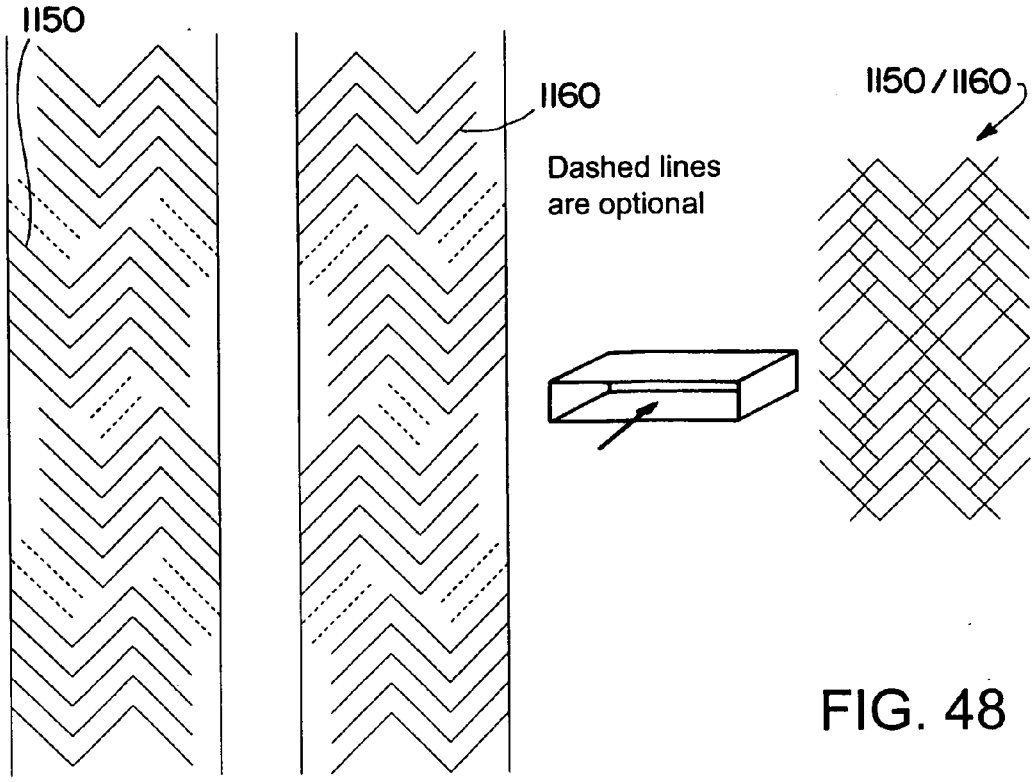
1150
1160
1150/1160
Dashed lines
are optional

FIG. 48

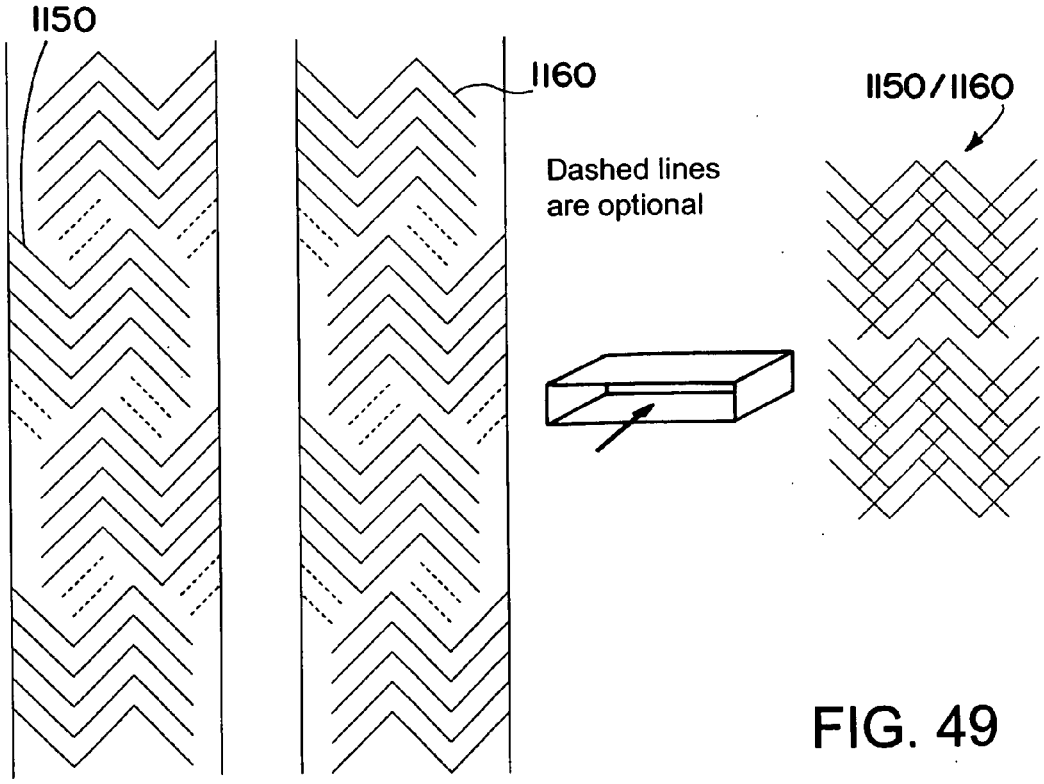
1150
1160
1150/1160
Dashed lines
are optional

FIG. 49