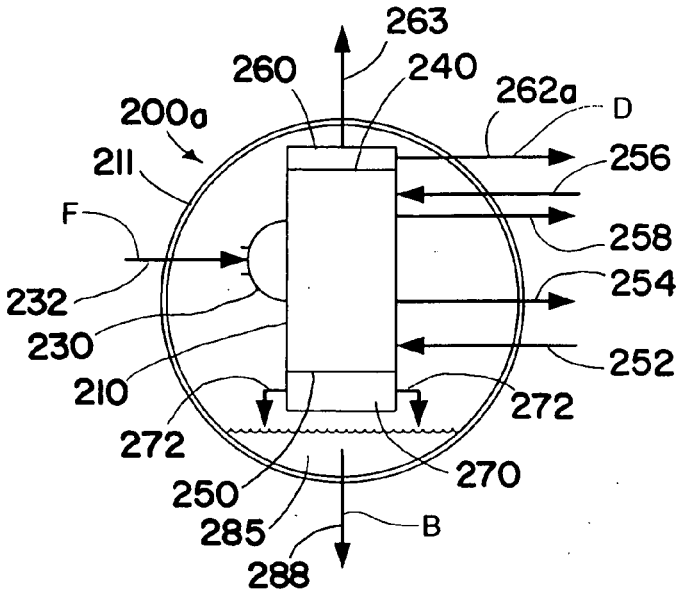
263
260
240
262a
D
200a
211
256
F
258
232
254
230
252
210
272
272
270
250
285
B
288

FIG. 3

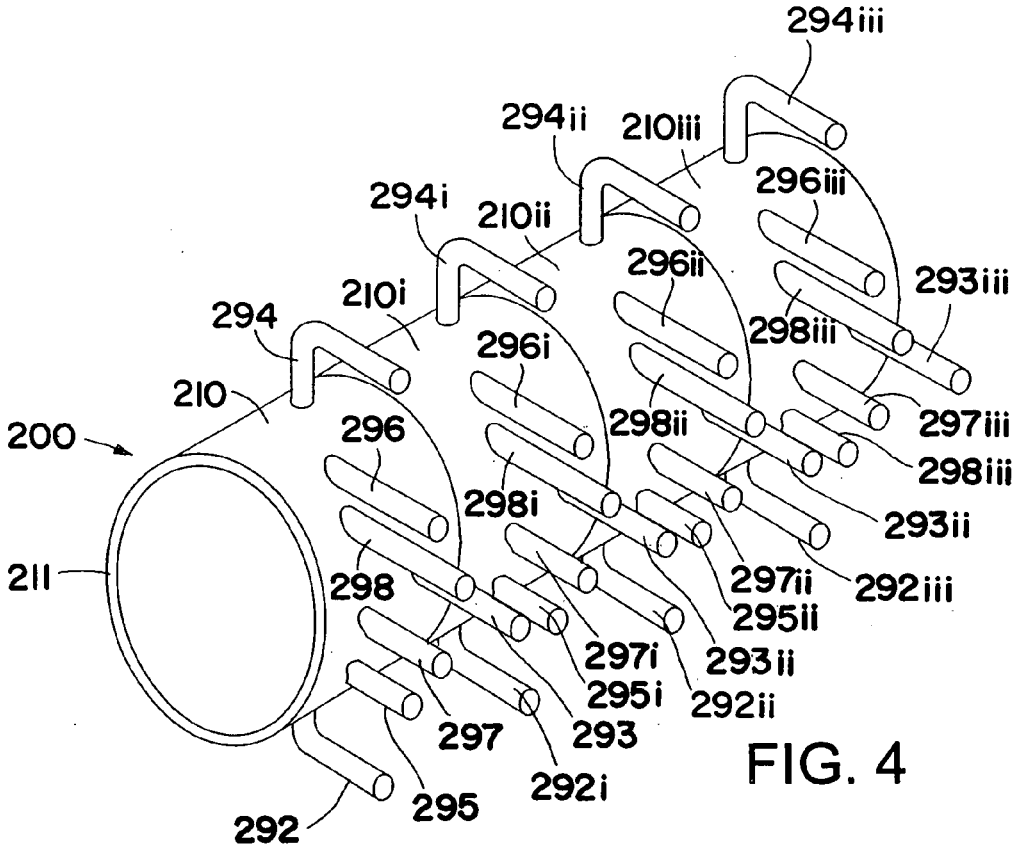
294iii
294ii
210iii
296iii
294i
210ii
296ii
293iii
210i
298iii
294
296i
210
298ii
297iii
200
296
298iii
298i
293ii
211
298
297ii
292iii
295ii
297i
293ii
295i
292ii
297
293
292i
295
292

FIG. 4