US 20100238116A1

(19) United States

(12) Patent Application Publication

SHIN

(10) Pub. No.: US 2010/0238116 A1

(43) Pub. Date: Sep. 23, 2010

(54) **METHOD AND APPARATUS OF PROVIDING HAPTIC EFFECT USING A PLURALITY OF VIBRATORS IN A PORTABLE TERMINAL**

(75) Inventor: **Kyu-Ho SHIN**, Gyeonggi-do (KR)

Correspondence Address:
CHA & REITER, LLC
210 ROUTE 4 EAST STE 103
PARAMUS, NJ 07652 (US)

(73) Assignee: **SAMSUNG ELECTRONICS CO., LTD.**, Gyeonggi-Do (KR)

(21) Appl. No.: **12/722,804**

(22) Filed: **Mar. 12, 2010**

(30) **Foreign Application Priority Data**

Mar. 20, 2009 (KR) 10-2009-0023740

Publication Classification

(51) **Int. Cl.**

G08B 6/00	(2006.01)
H04B 3/36	(2006.01)
G06F 3/041	(2006.01)
G06F 3/02	(2006.01)

(52) **U.S. Cl.** **345/168**; 340/407.1; 340/407.2; 345/173

(57) **ABSTRACT**
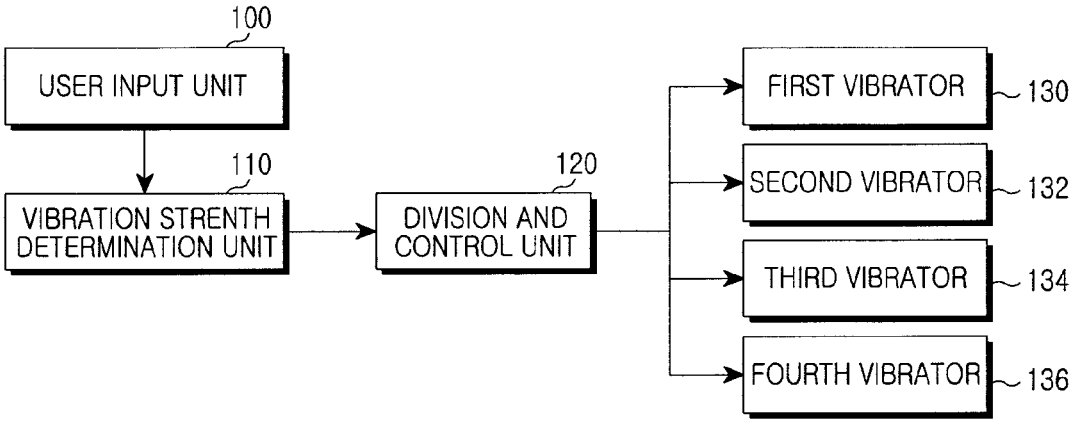
A method and apparatus for providing a haptic effect using a plurality of vibrators in a portable terminal. The method of providing a haptic effect using a plurality of vibrators in a portable terminal includes detecting whether user's input information is generated, determining a vibration strength level of each of the vibrators using the user's input information, and generating vibration according to the determined vibration strength via each of the vibrators.