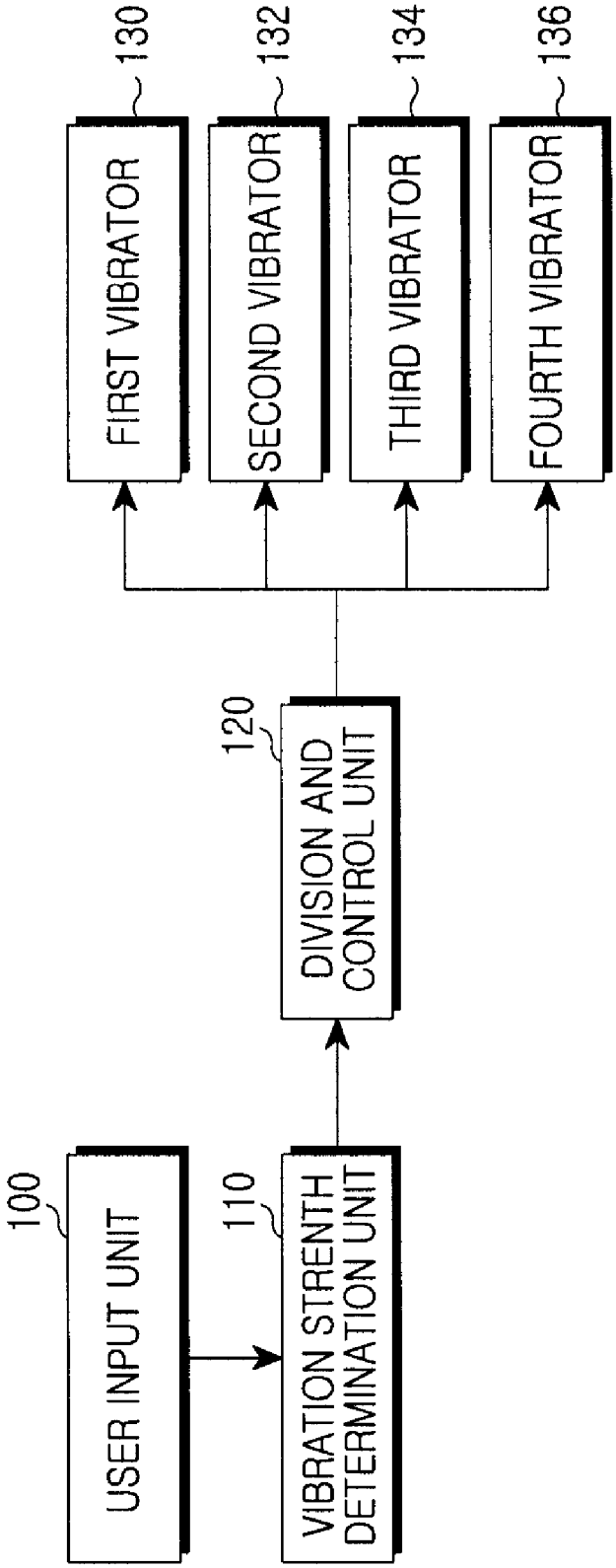
100
USER INPUT UNIT
110
VIBRATION STRENTH DETERMINATION UNIT
120
DIVISION AND CONTROL UNIT
130
FIRST VIBRATOR
132
SECOND VIBRATOR
134
THIRD VIBRATOR
136
FOURTH VIBRATOR

FIG. 1