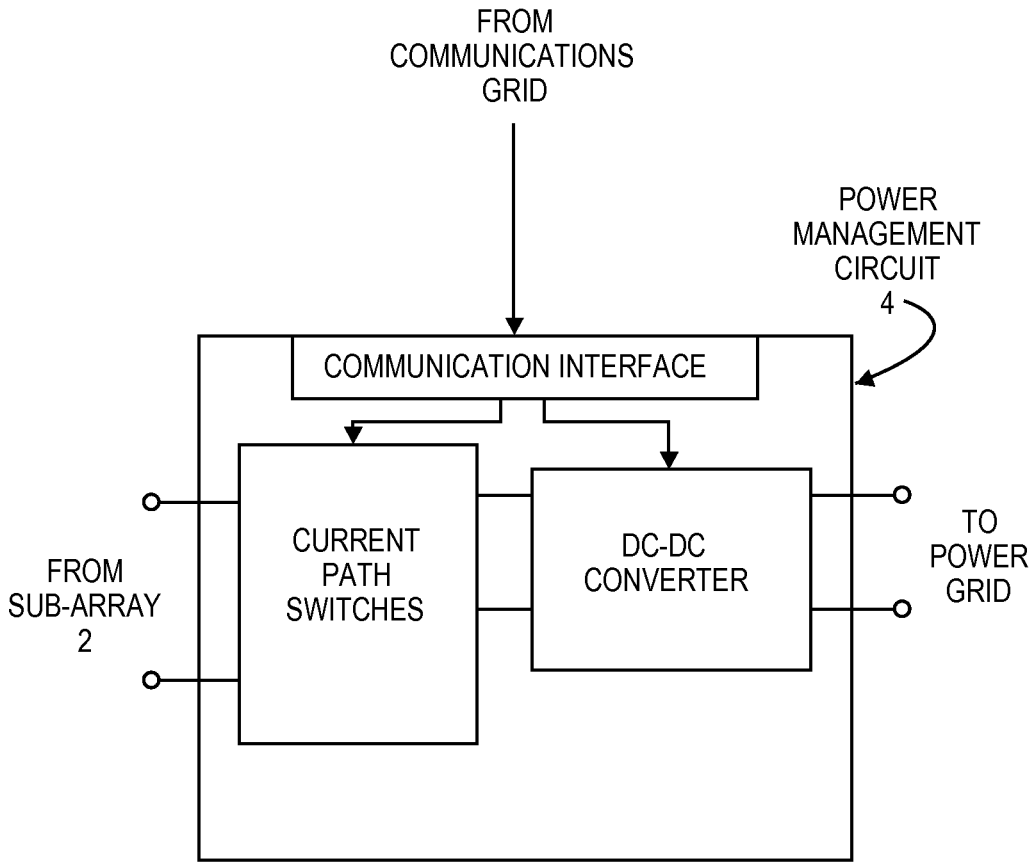
FROM
COMMUNICATIONS
GRID
POWER
MANAGEMENT
CIRCUIT
4
COMMUNICATION INTERFACE
CURRENT
PATH
SWITCHES
DC-DC
CONVERTER
FROM
SUB-ARRAY
2
TO
POWER
GRID

FIG. 6