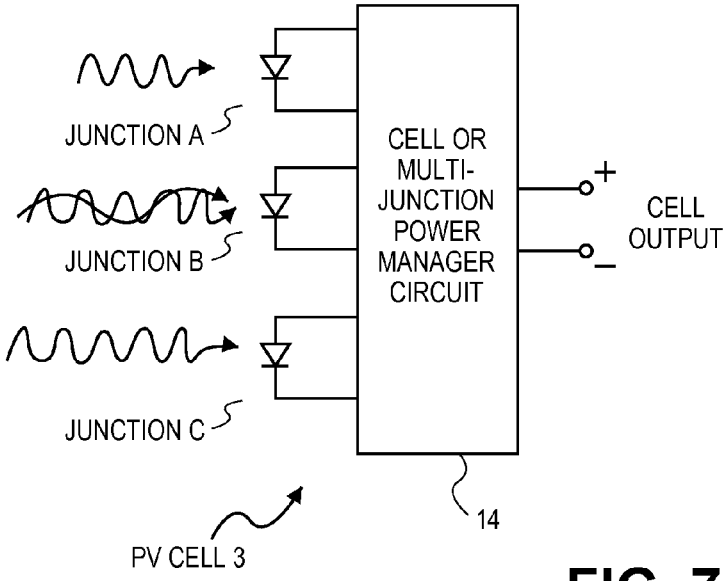
JUNCTION A
JUNCTION B
JUNCTION C
CELL OR MULTI-JUNCTION POWER MANAGER CIRCUIT
+
−
CELL OUTPUT
14
PV CELL 3

FIG. 7

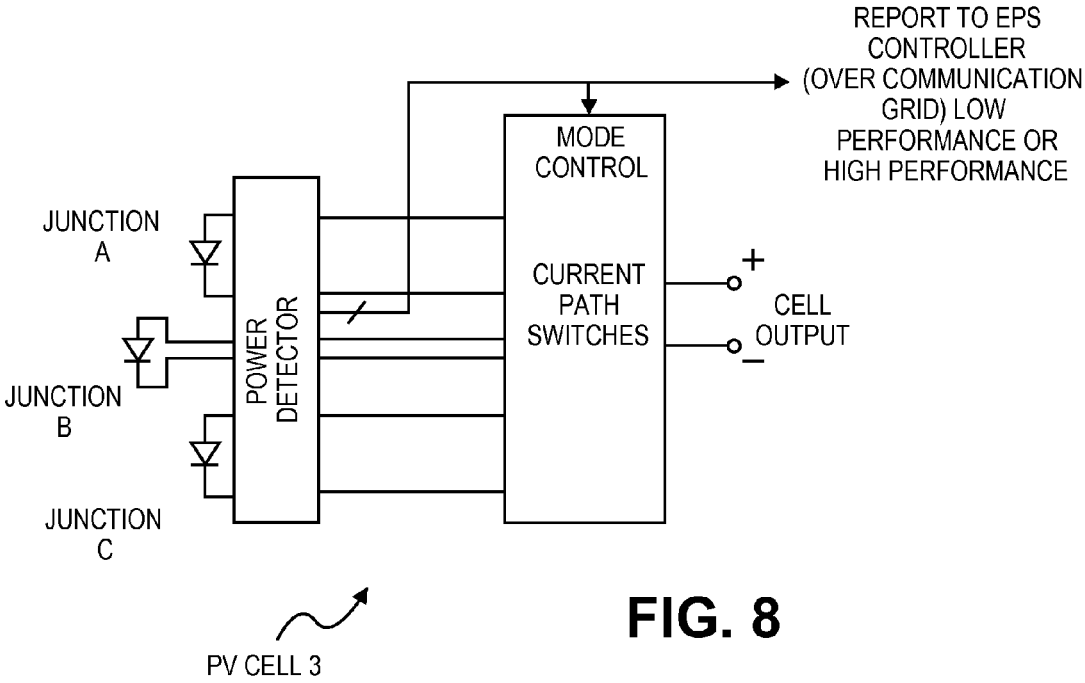
REPORT TO EPS CONTROLLER (OVER COMMUNICATION GRID) LOW PERFORMANCE OR HIGH PERFORMANCE
MODE CONTROL
CURRENT PATH SWITCHES
POWER DETECTOR
JUNCTION A
JUNCTION B
JUNCTION C
+
−
CELL OUTPUT
PV CELL 3

FIG. 8