FIG. 1

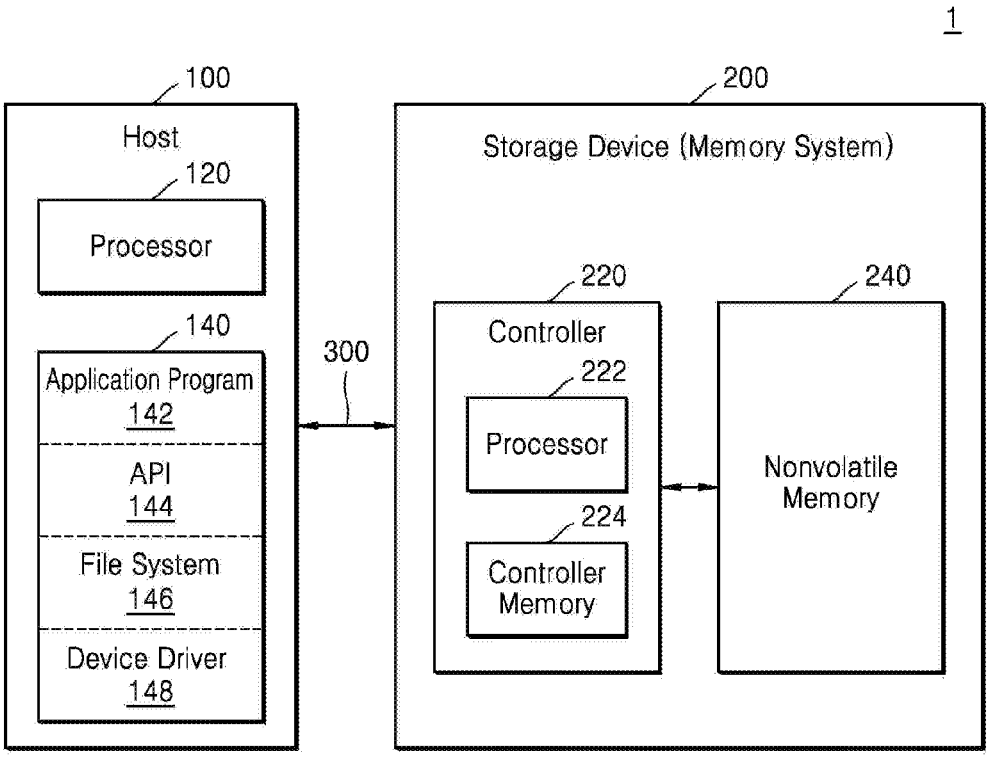
1
100
Host
120
Processor
140
Application Program
142
API
144
File System
146
Device Driver
148
300
200
Storage Device (Memory System)
220
Controller
222
Processor
224
Controller Memory
240
Nonvolatile Memory