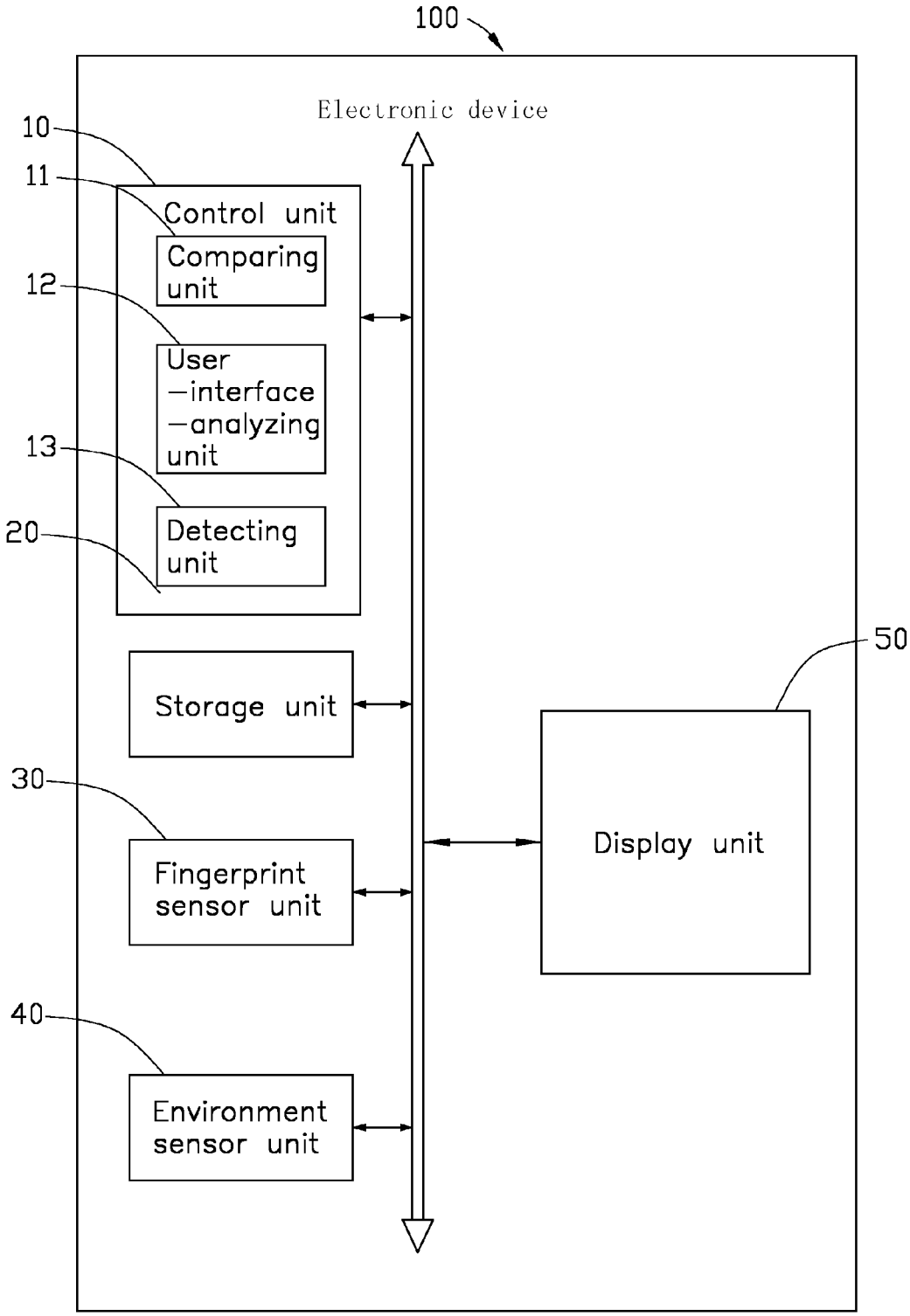
100
Electronic device
10
11
Control unit
Comparing unit
12
User -interface -analyzing unit
13
Detecting unit
20
Storage unit
50
30
Fingerprint sensor unit
Display unit
40
Environment sensor unit

FIG. 1