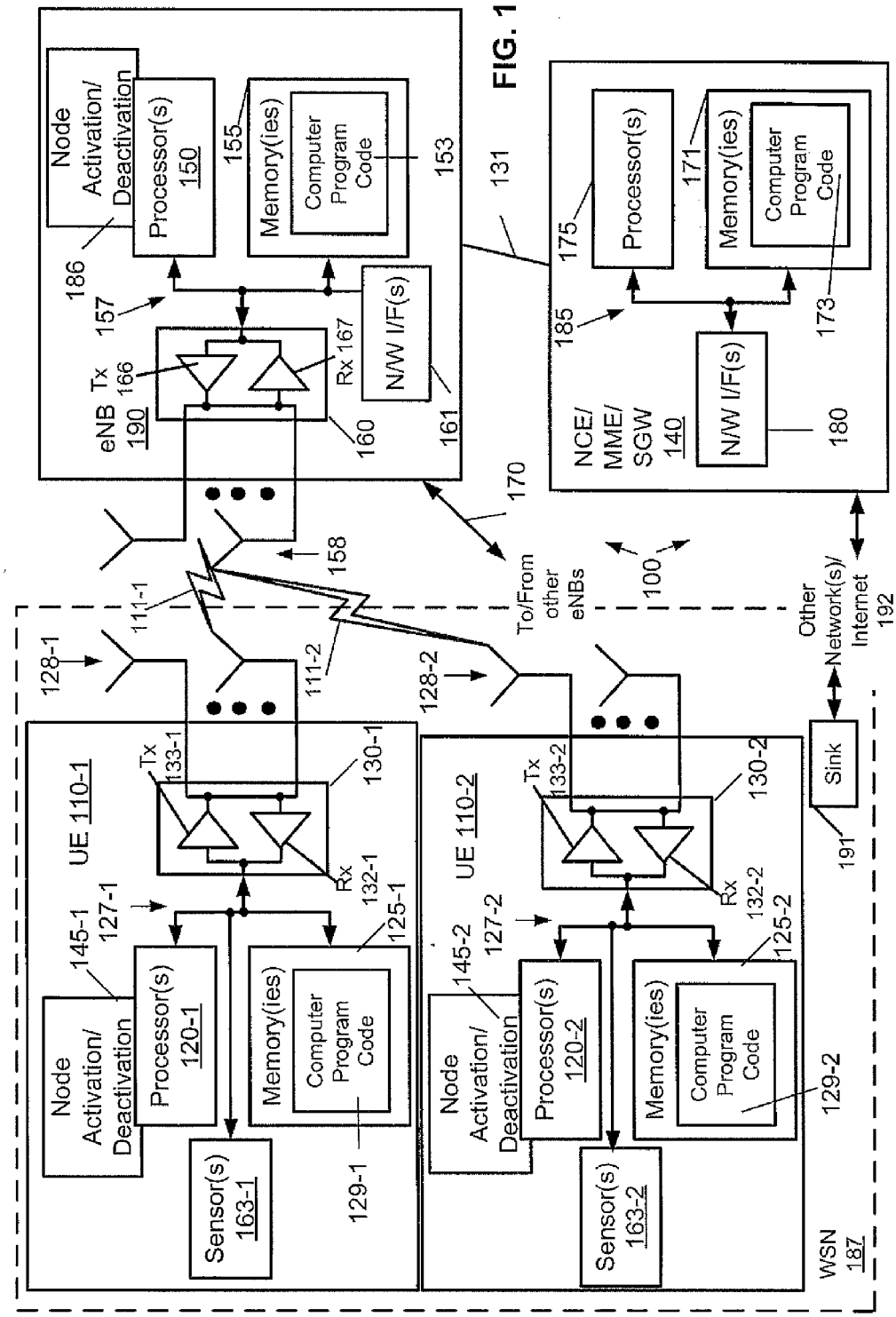
Node Activation/ Deactivation
Processor(s) 150
Memory(ies)
Computer Program Code
N/W I/F(s)
eNB 190
Tx 166
Rx 167
186
157
155
153
160
161
131
170
158
111-1
111-2
128-1
128-2
To/From other eNBs
100
Processor(s)
Memory(ies)
Computer Program Code
N/W I/F(s)
NCE/ MME/ SGW 140
175
171
173
185
180
Other Network(s)/ Internet 192
Sink
191
UE 110-1
Tx 133-1
Rx 132-1
130-1
125-1
145-1
127-1
Node Activation/ Deactivation
Processor(s) 120-1
Memory(ies)
Computer Program Code
Sensor(s) 163-1
129-1
UE 110-2
Tx 133-2
Rx 132-2
130-2
125-2
145-2
127-2
Node Activation/ Deactivation
Processor(s) 120-2
Memory(ies)
Computer Program Code
Sensor(s) 163-2
129-2
WSN 187

FIG. 1