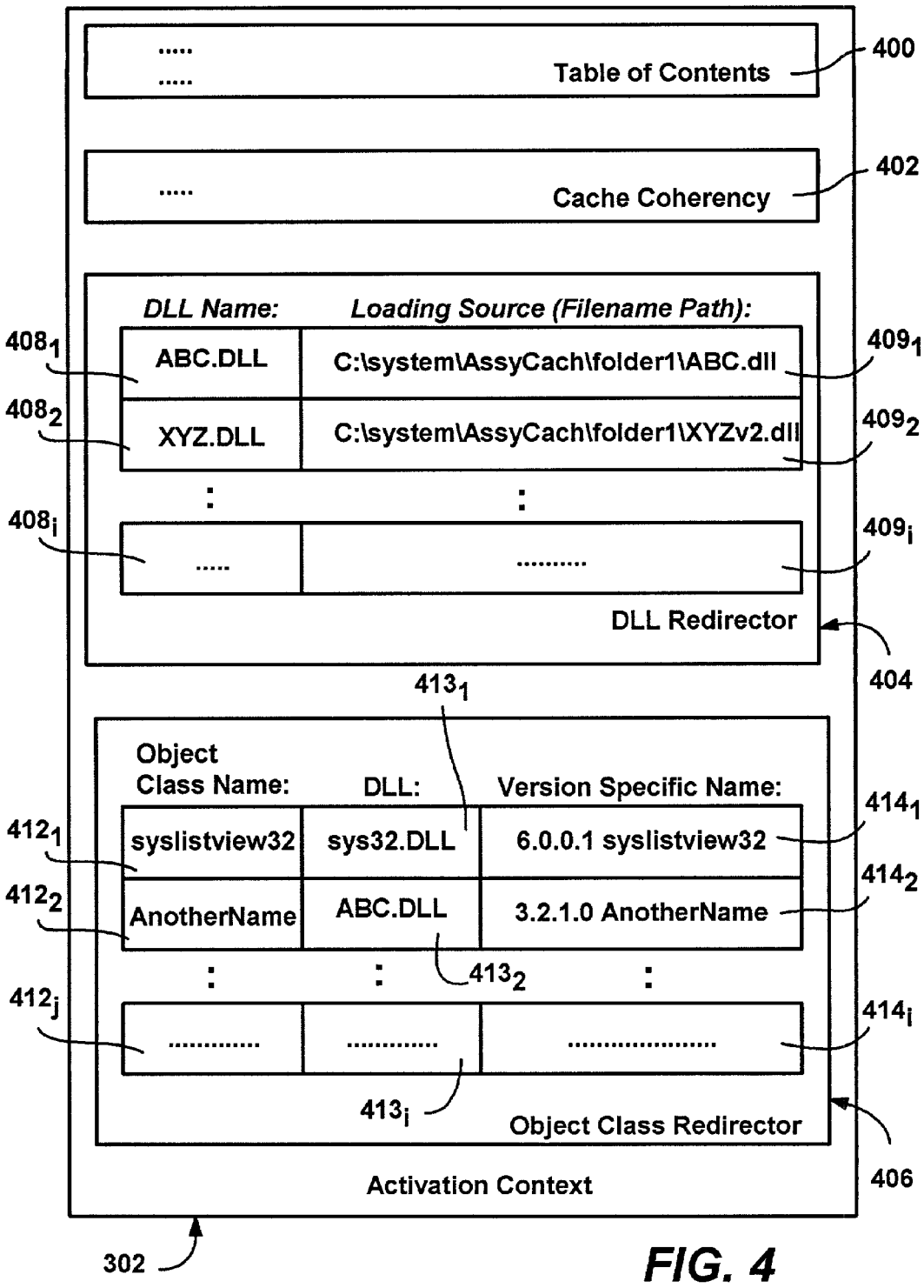
.....
.....
Table of Contents
400
.....
Cache Coherency
402
DLL Name:
Loading Source (Filename Path):
408₁
ABC.DLL
C:\system\AssyCach\folder1\ABC.dll
409₁
408₂
XYZ.DLL
C:\system\AssyCach\folder1\XYZv2.dll
409₂
408ᵢ
.....
.....
409ᵢ
DLL Redirector
404
413₁
Object
Class Name:
DLL:
Version Specific Name:
412₁
syslistview32
sys32.DLL
6.0.0.1 syslistview32
414₁
412₂
AnotherName
ABC.DLL
3.2.1.0 AnotherName
414₂
413₂
412ⱼ
414ᵢ
413ᵢ
Object Class Redirector
406
Activation Context
302

FIG. 4