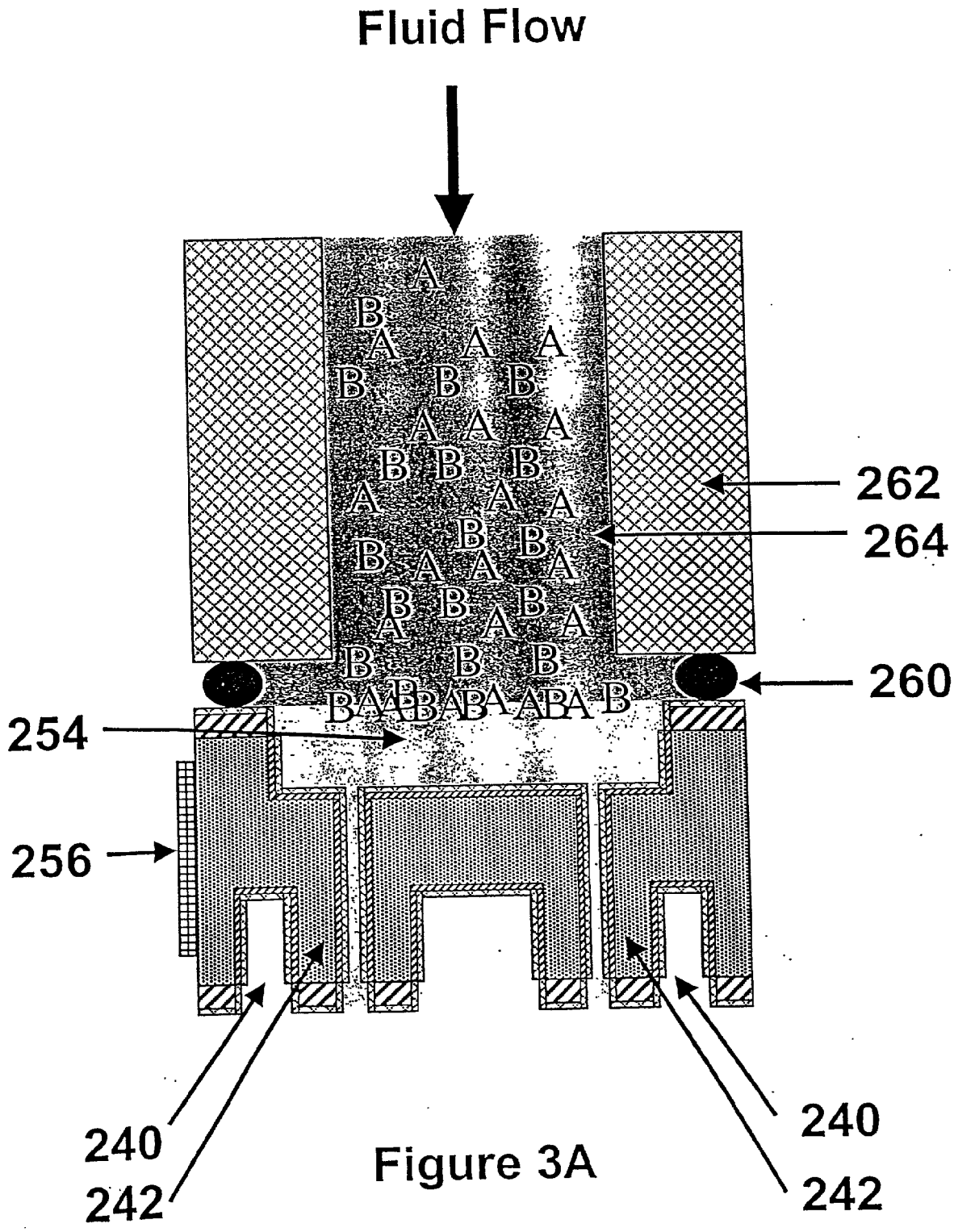

Figure 3A