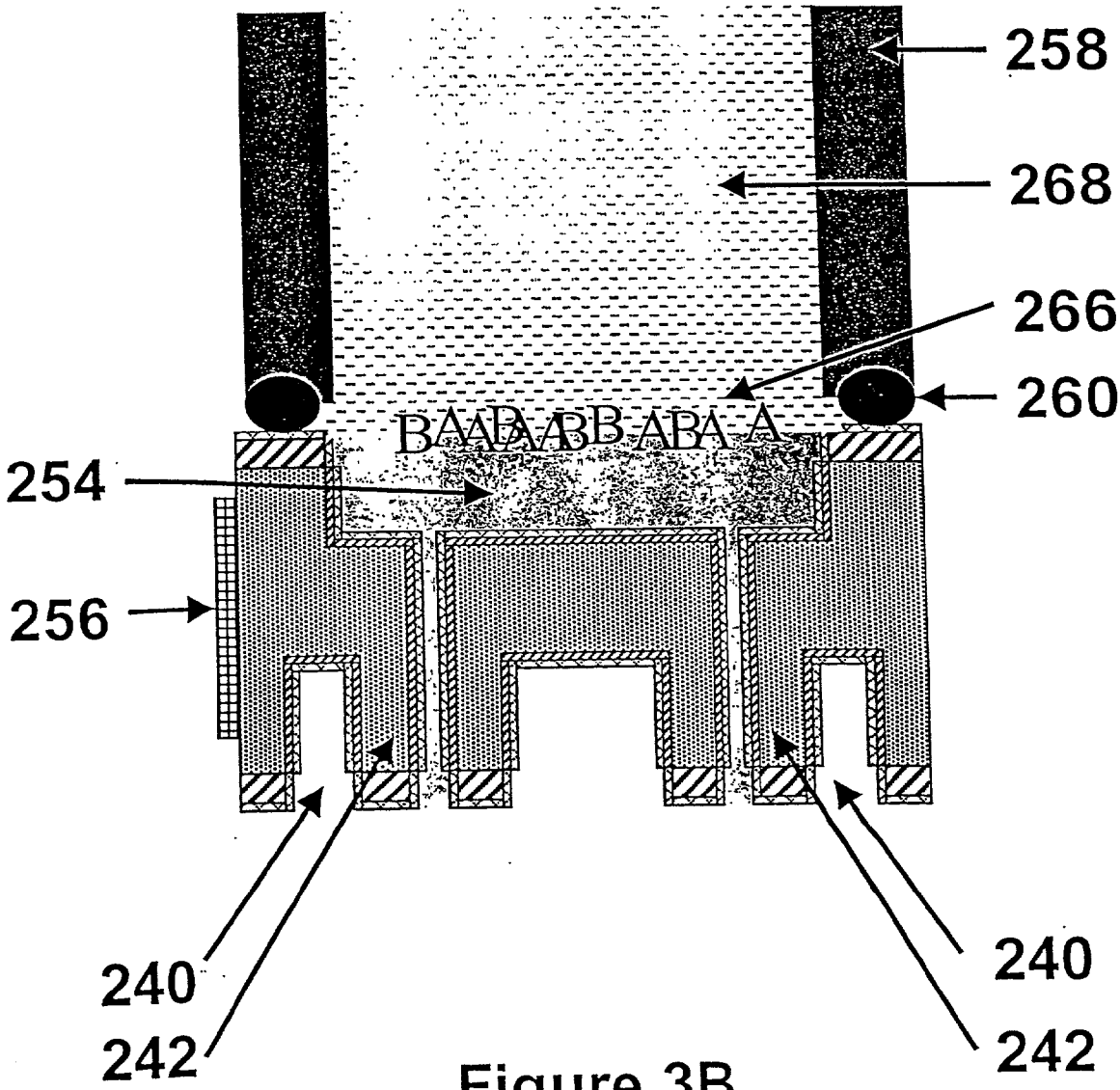

Figure 3B