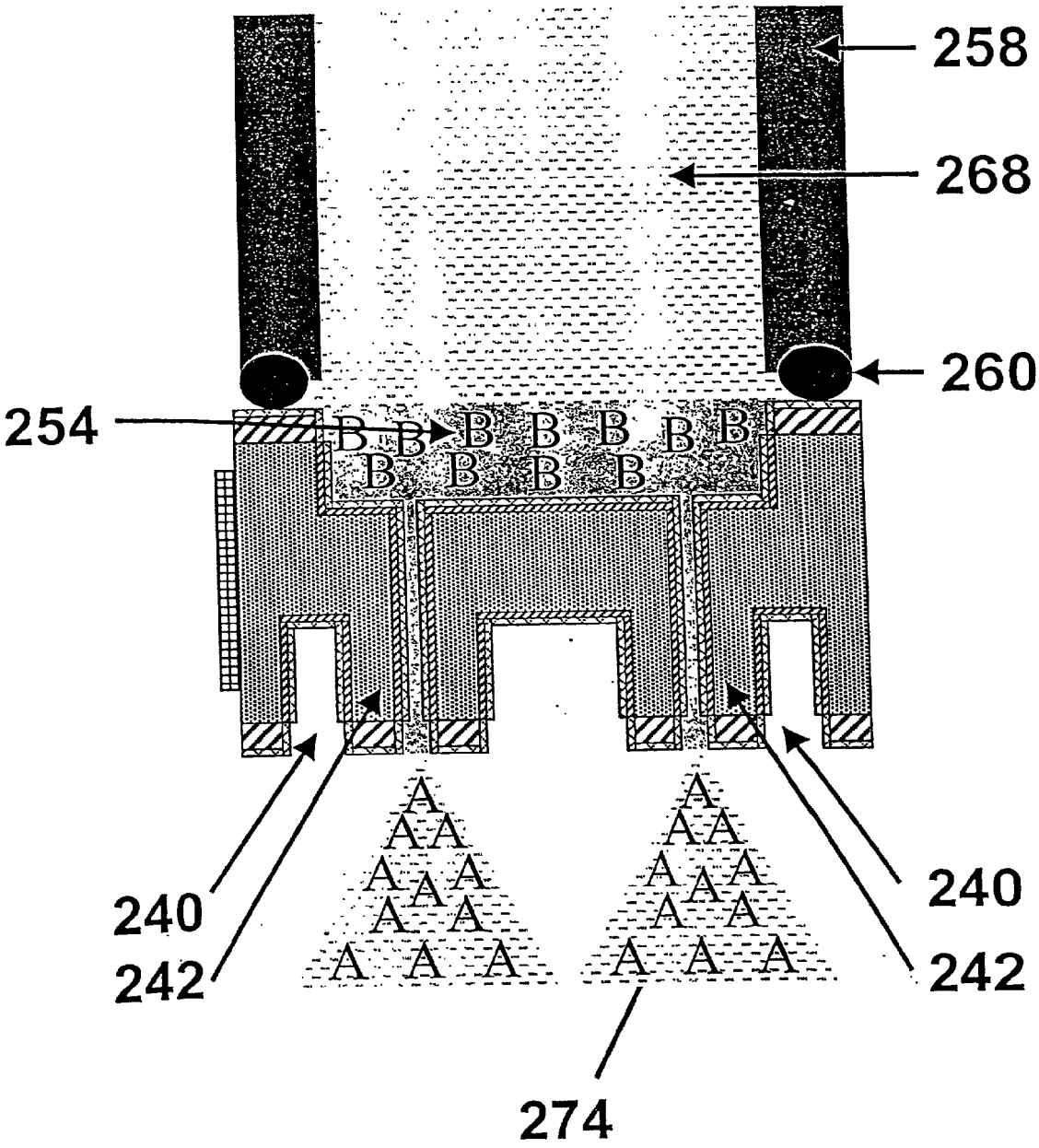
258
268
260
254
B B B B B B B
B B B B
240
242
240
242
A
A A
A A A
A A A
A A A
A
A A
A A A
A A A
A A A
274

Figure 3C