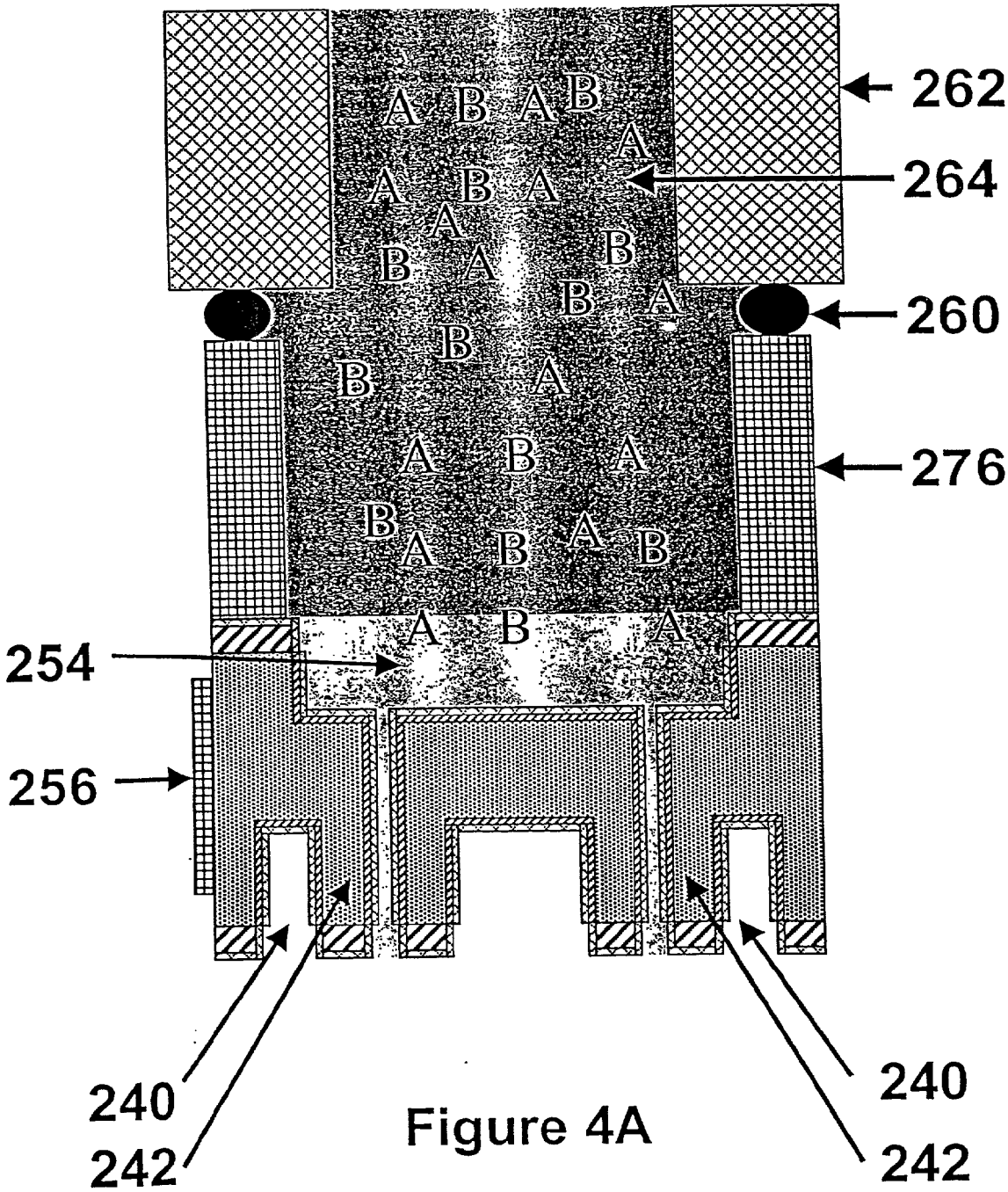

Figure 4A