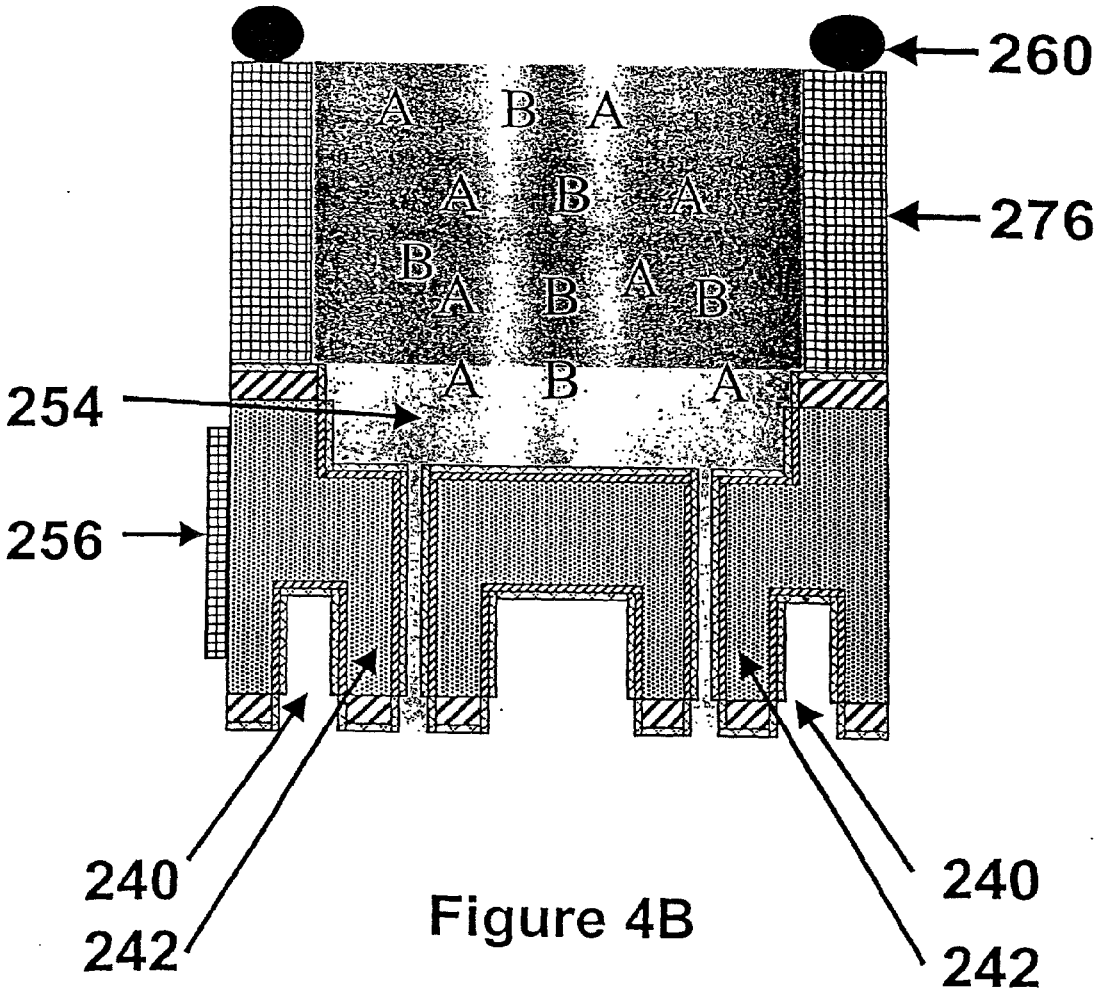

Figure 4B