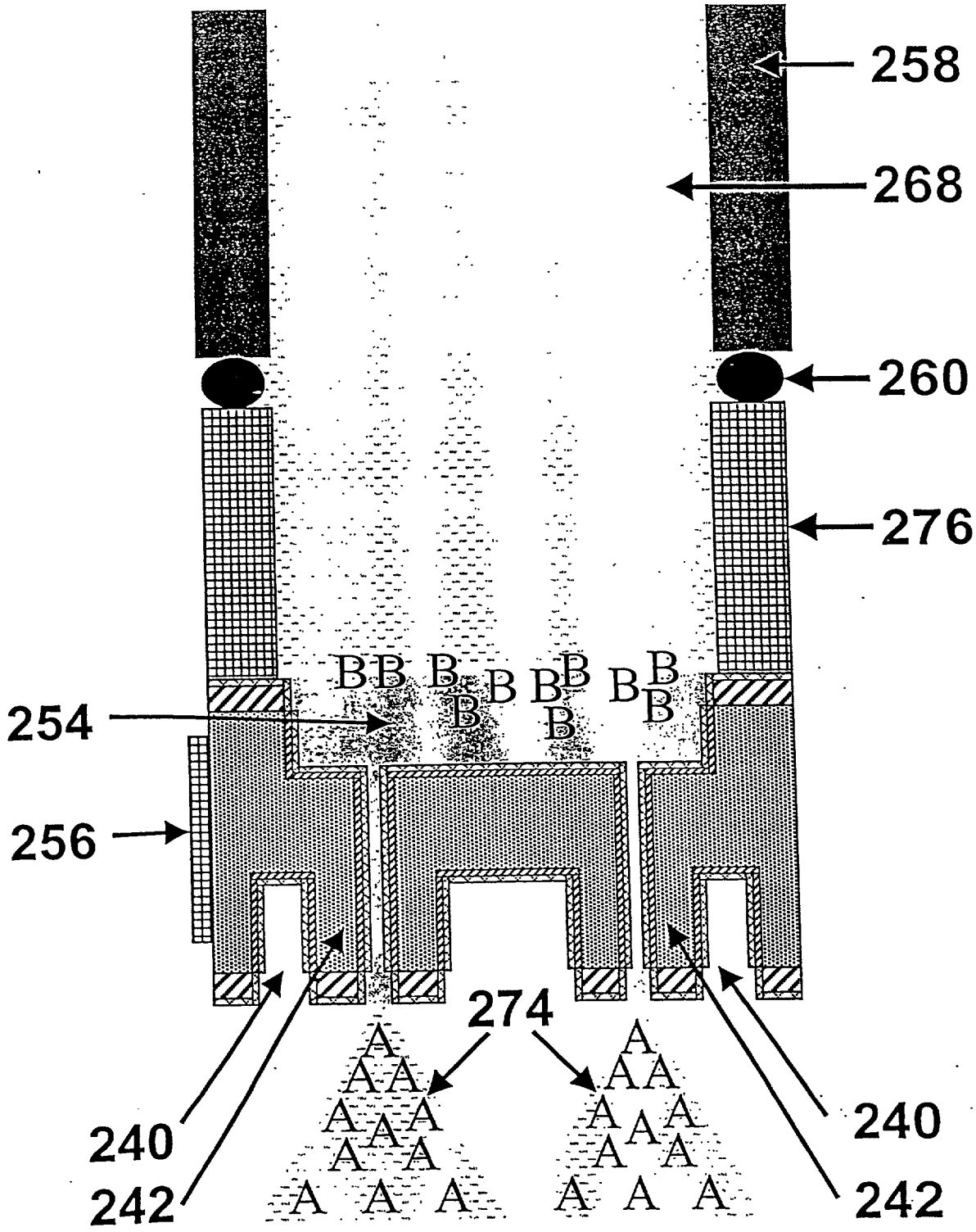

Figure 4D