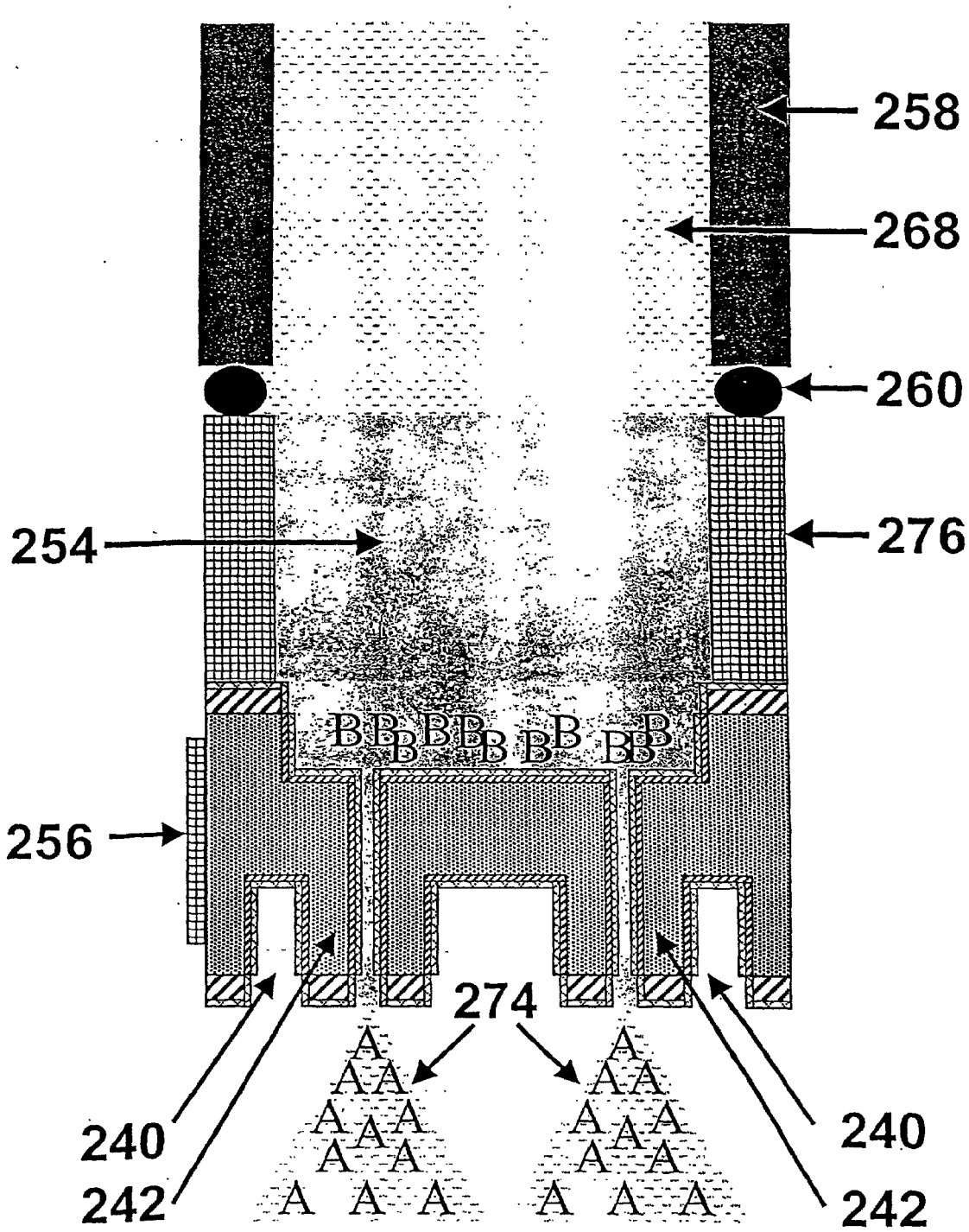

Figure 5C