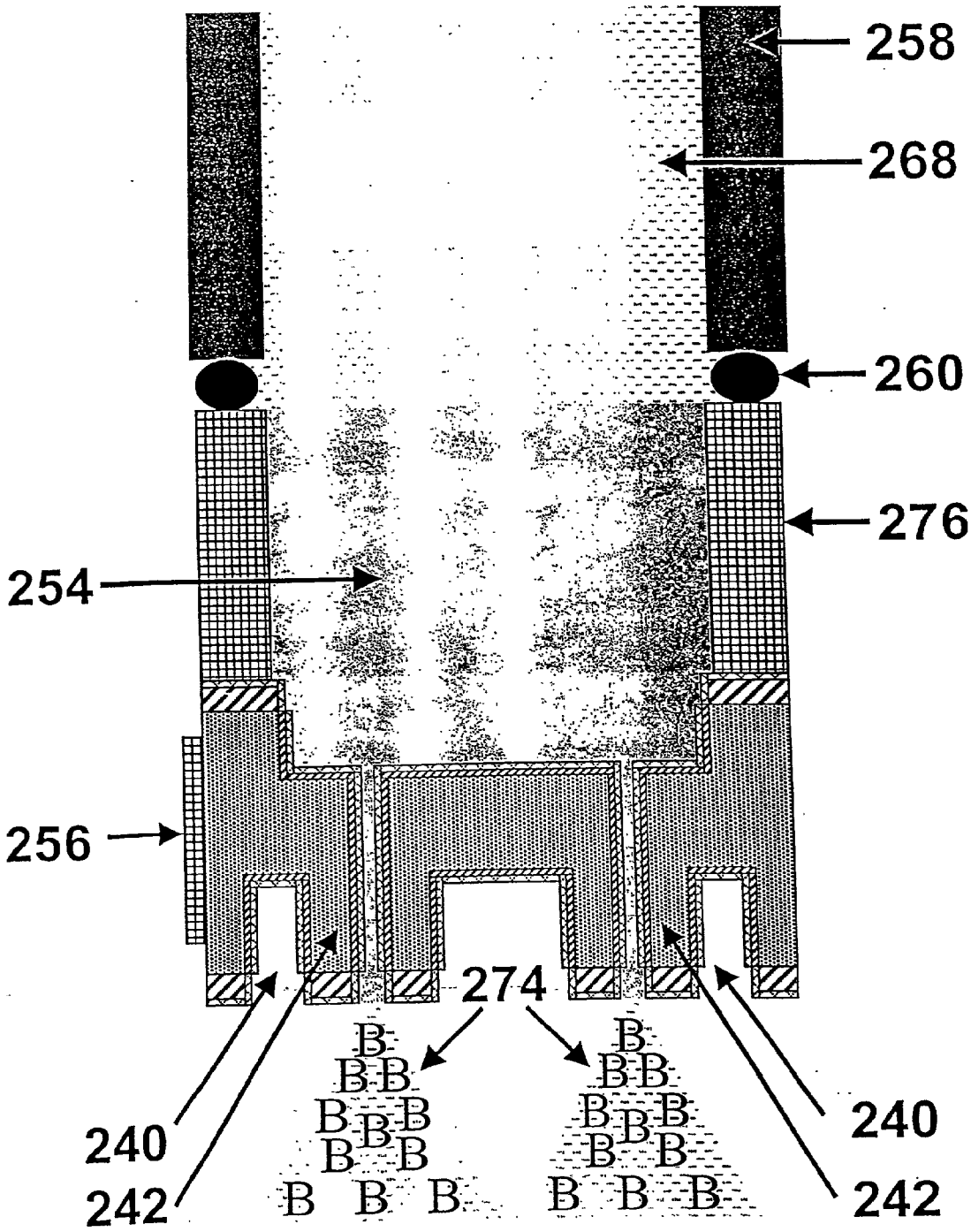

Figure 5D