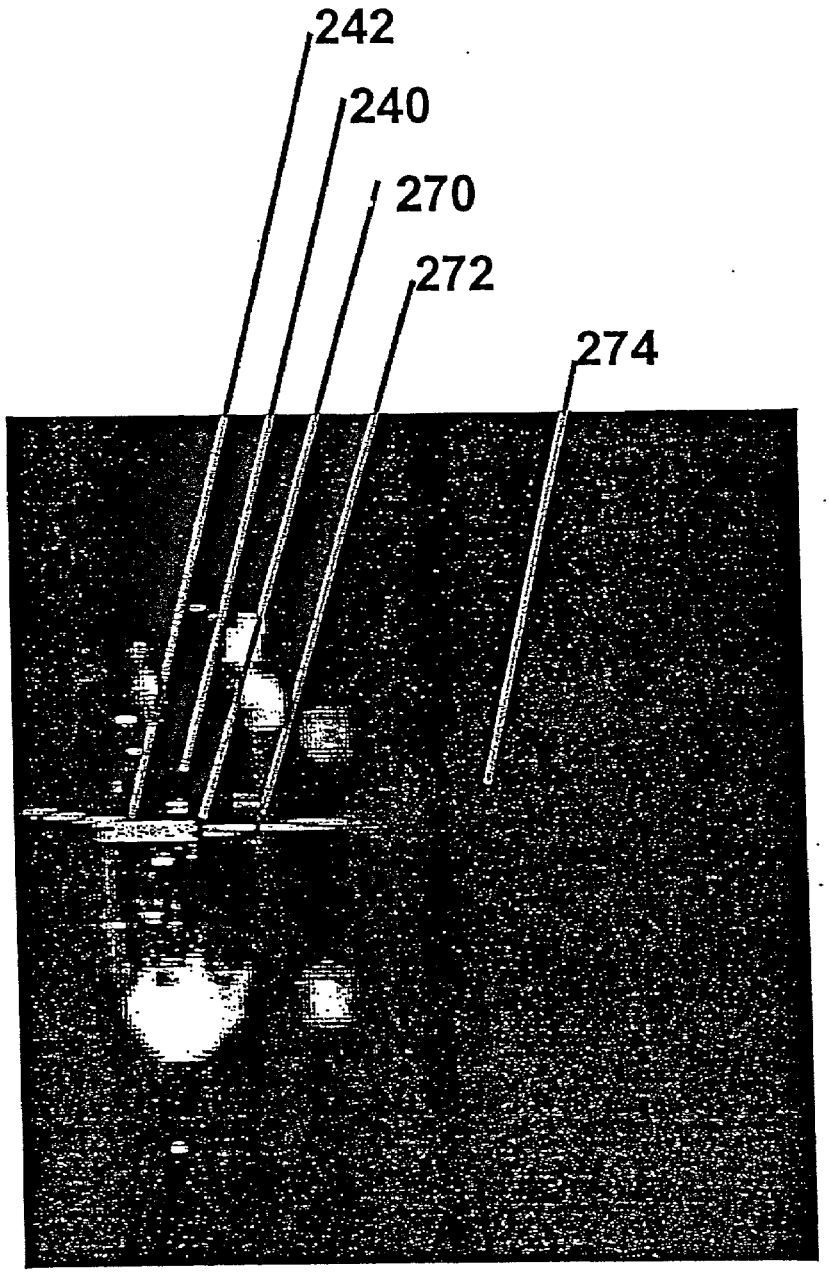

Figure 8A