SIMION

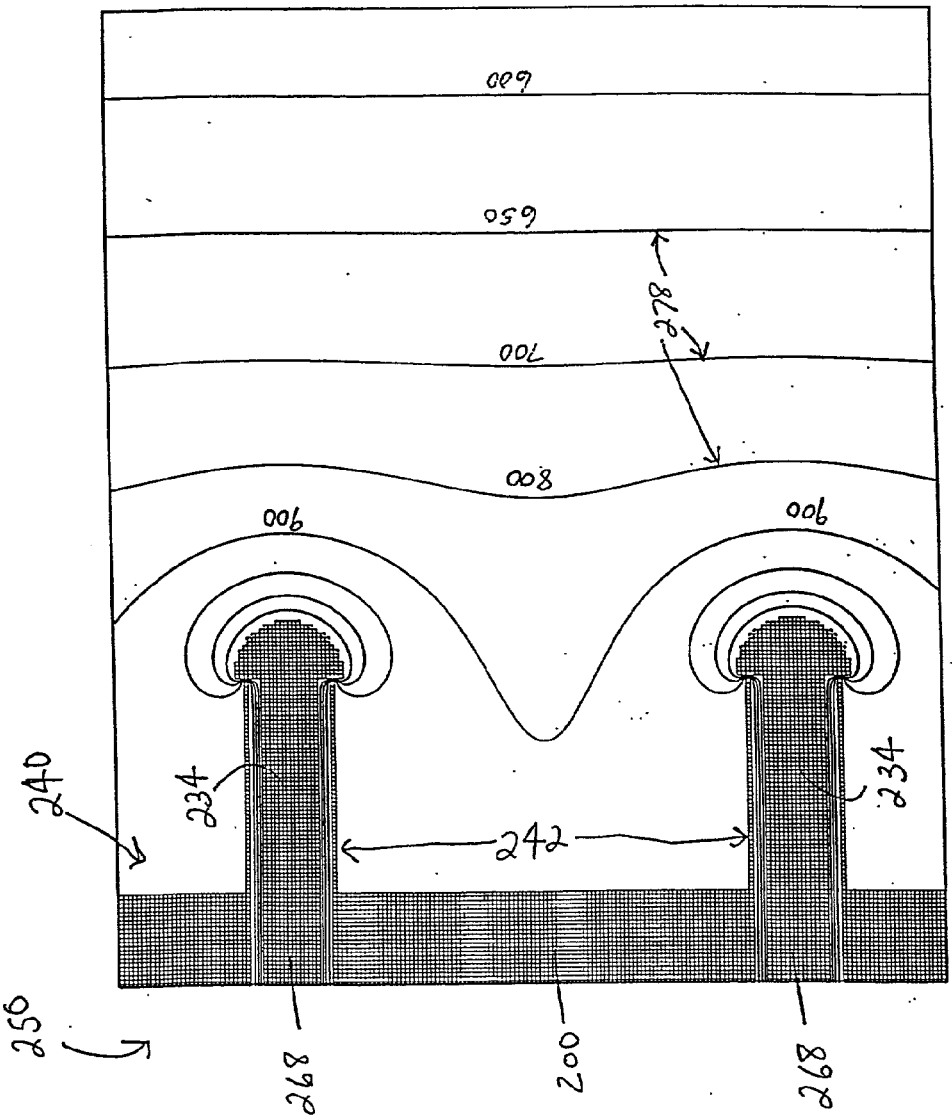

Figure 12D