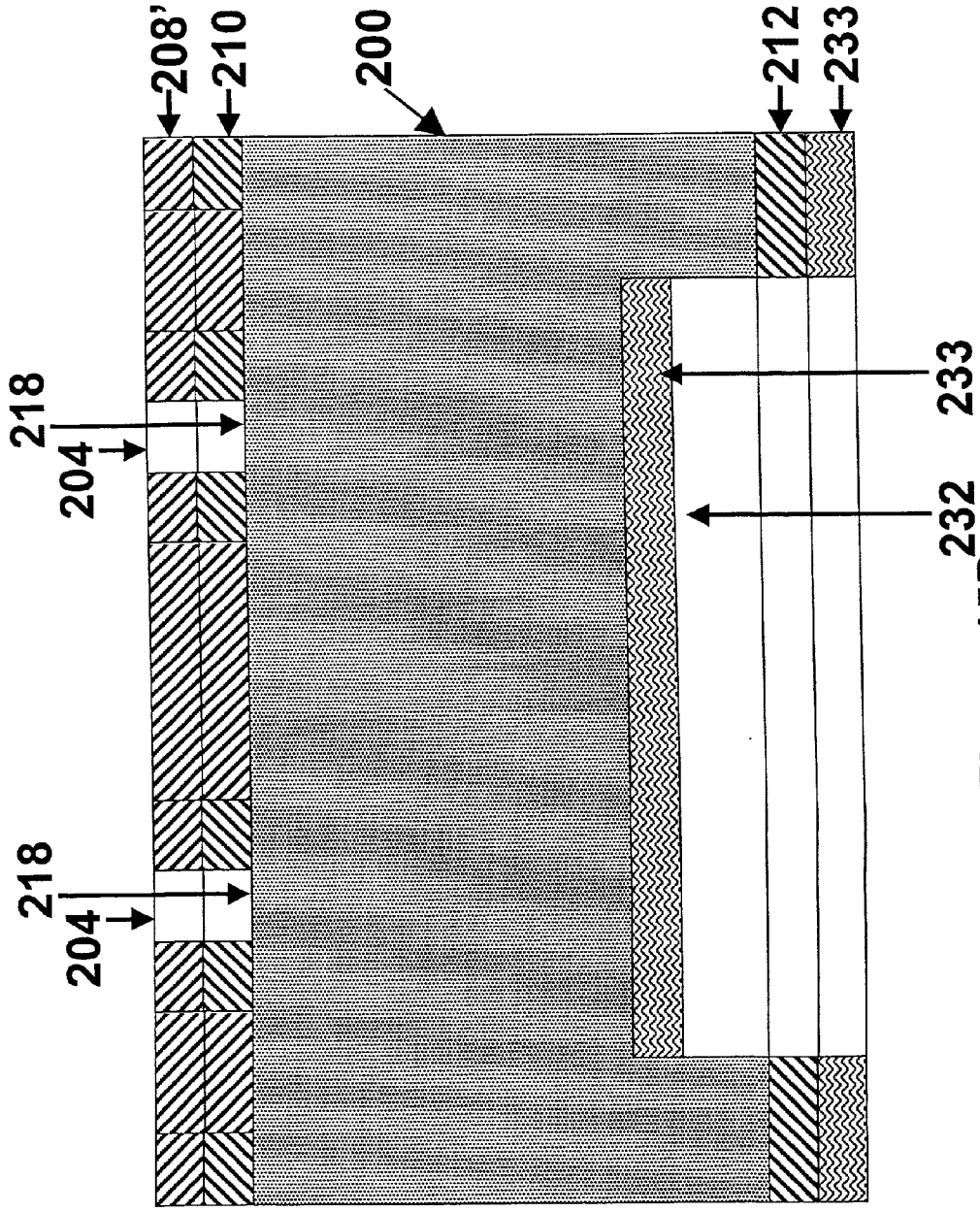

Figure 15D