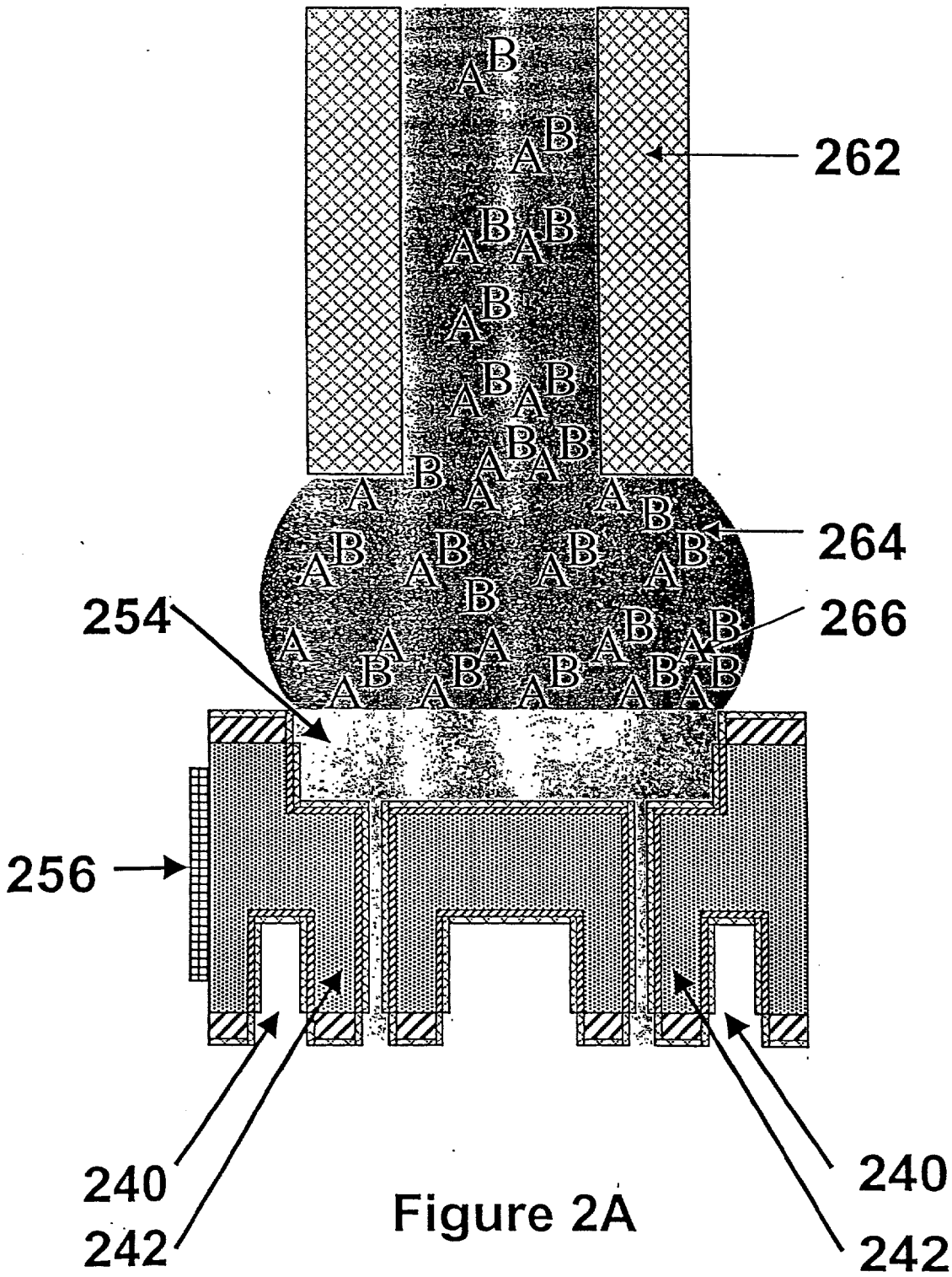

Figure 2A