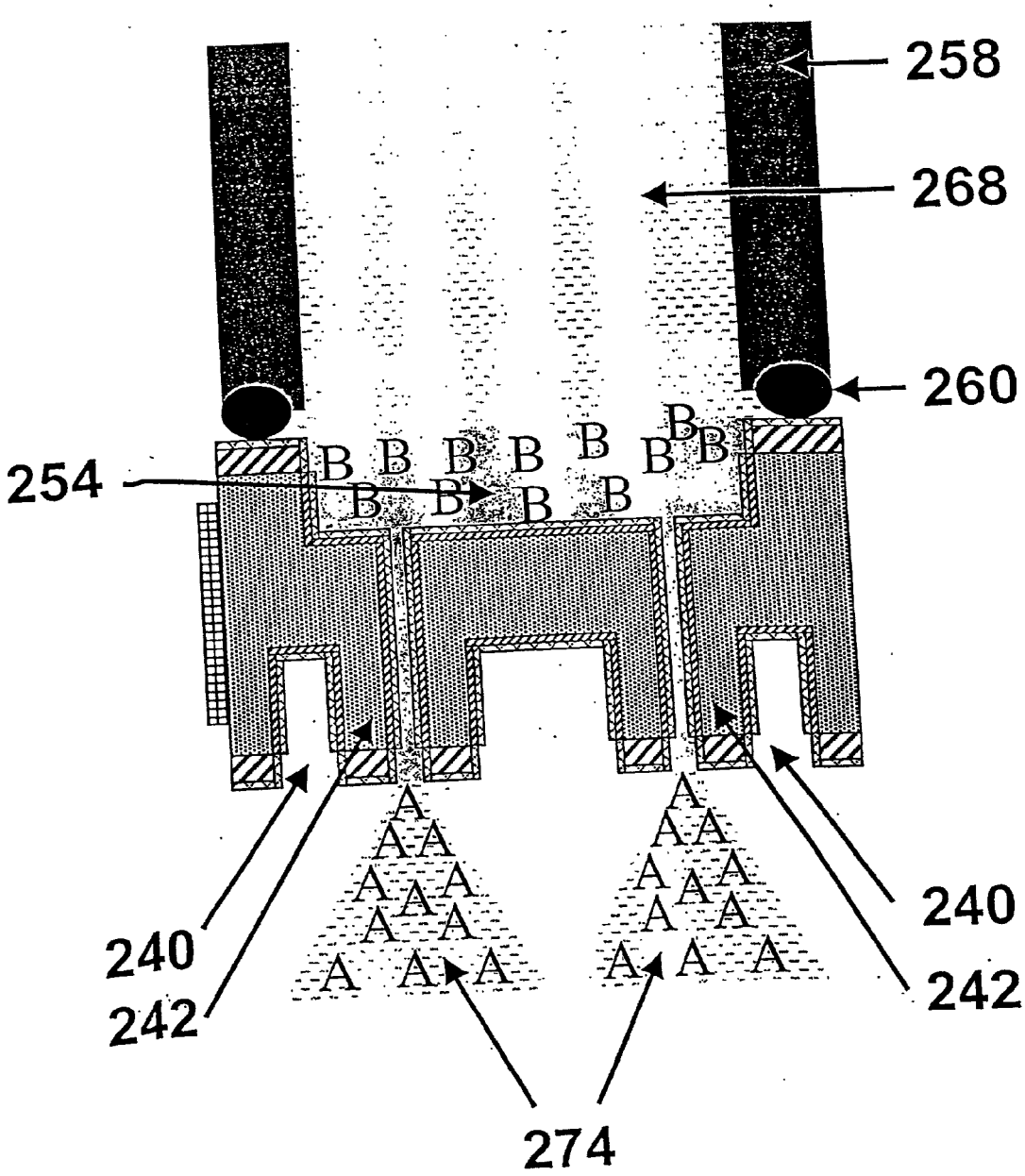

Figure 2D