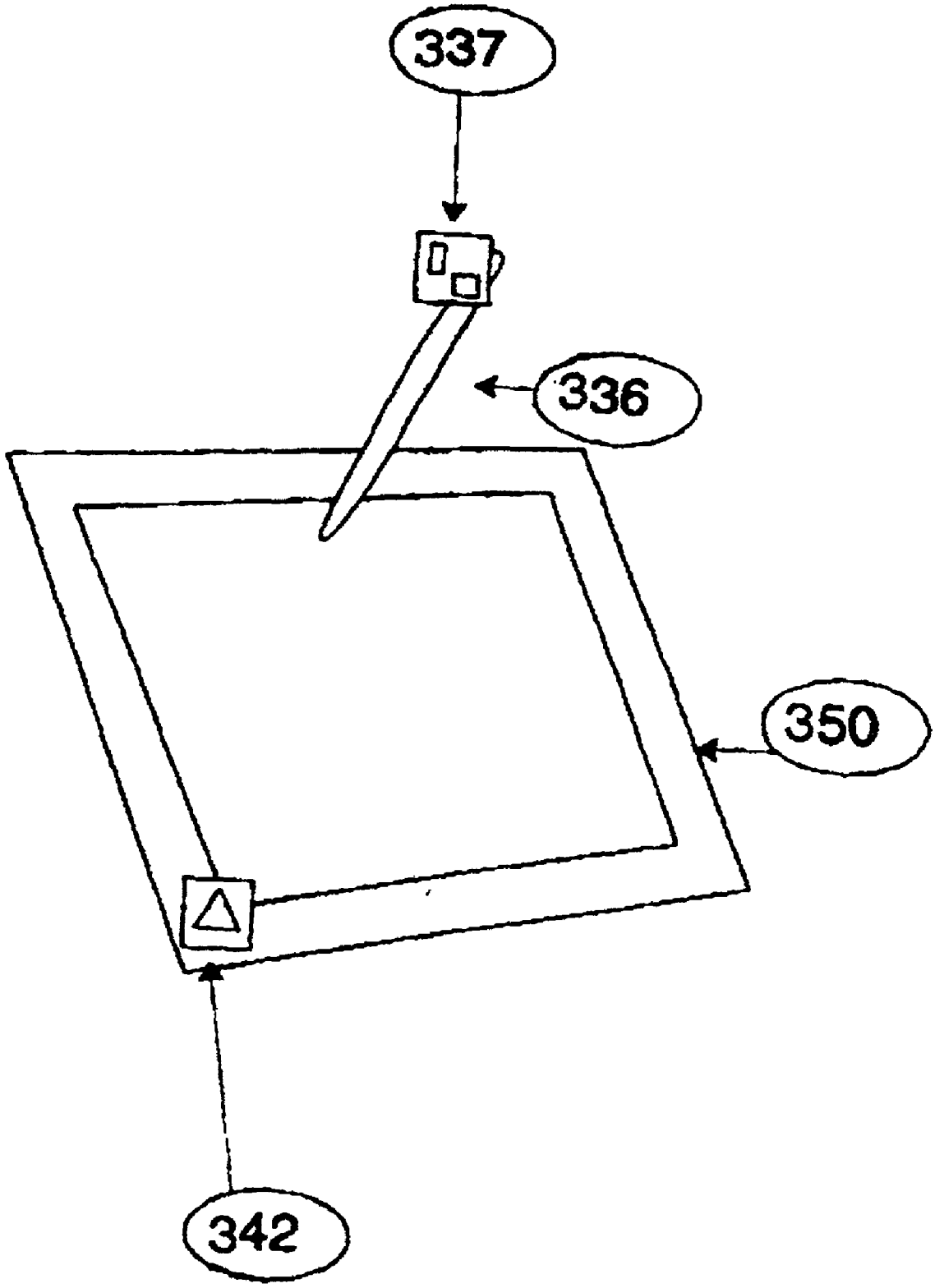

Figure 3 b