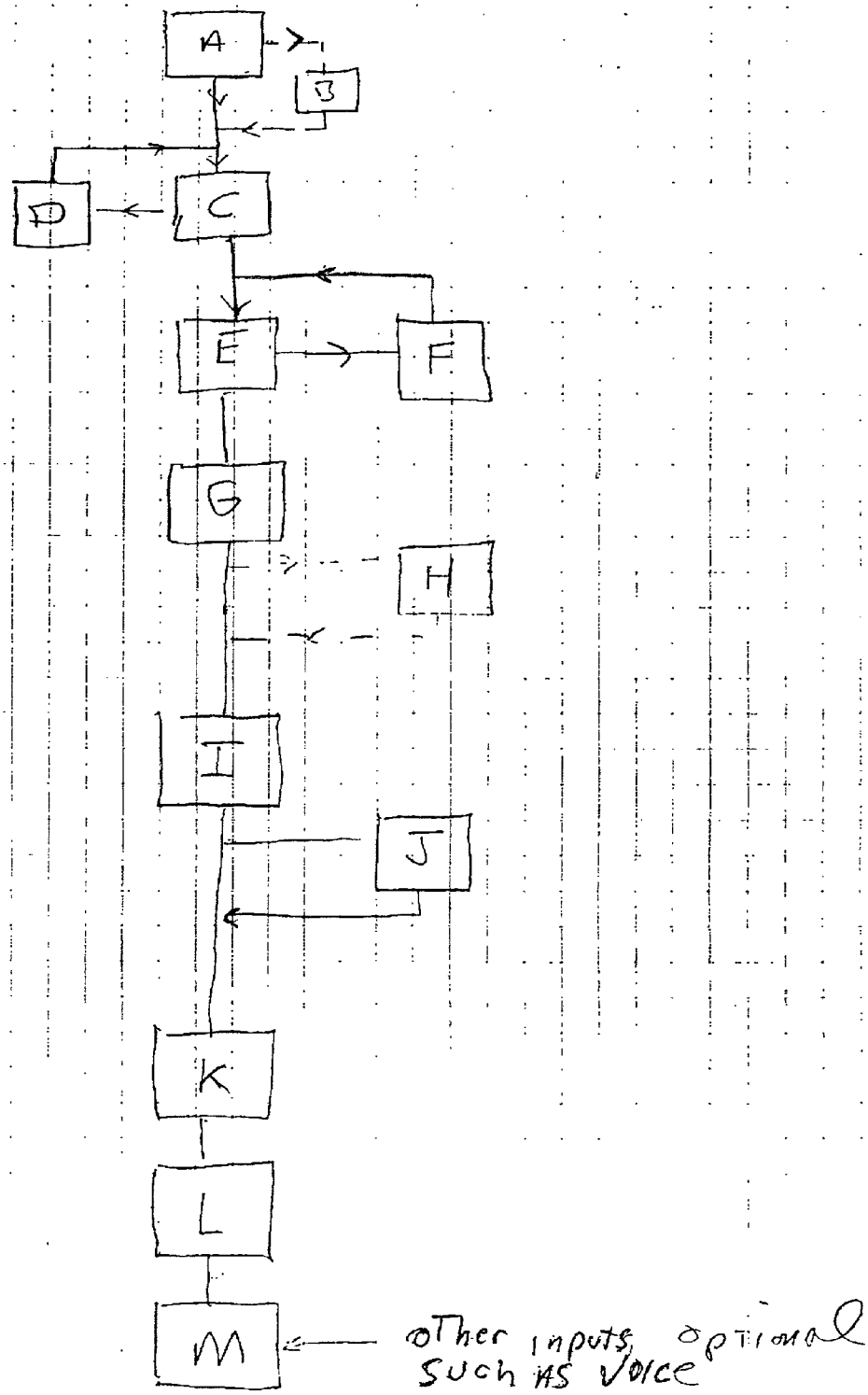

FIG 1D