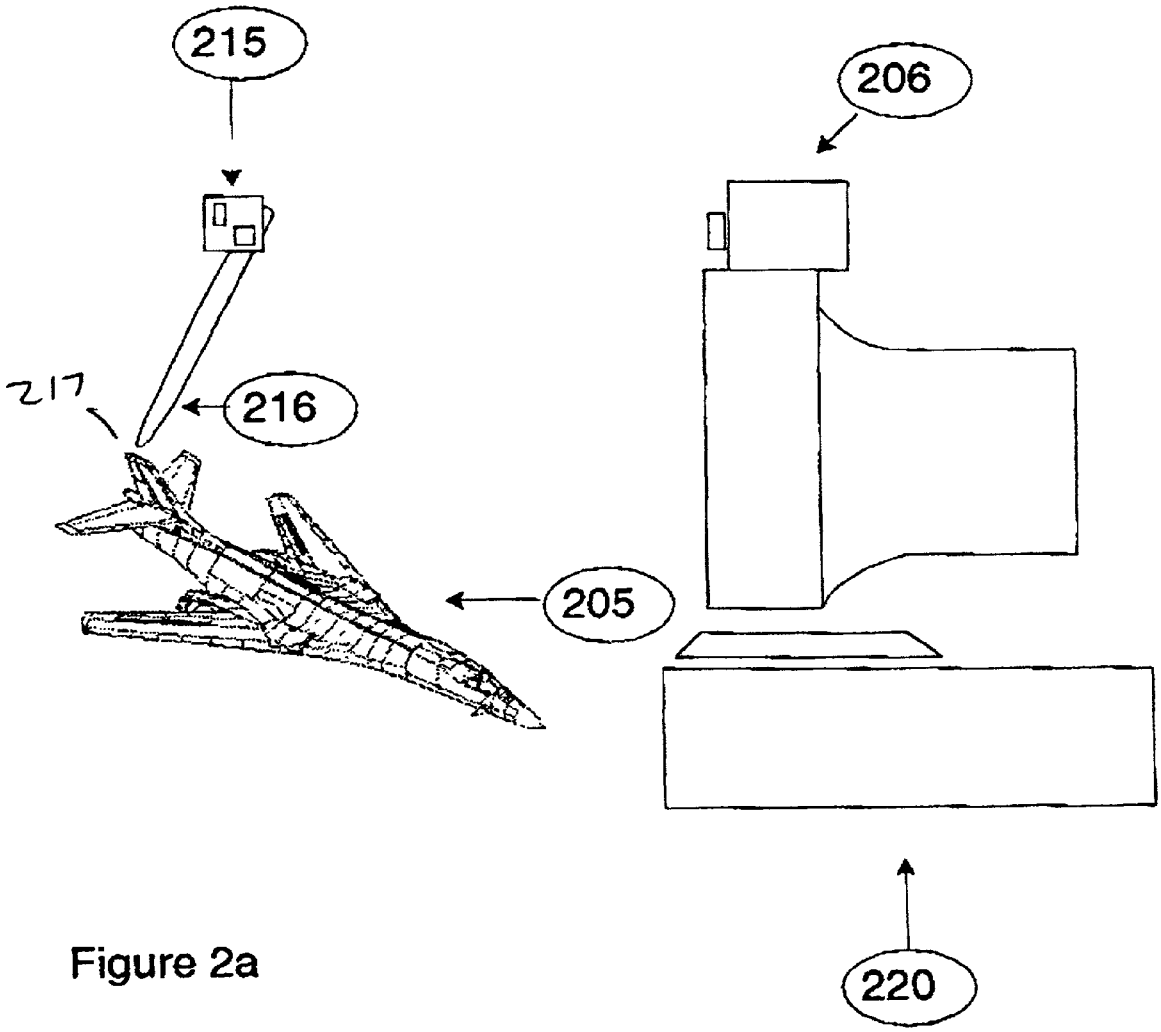

Figure 2a