FIG. 11

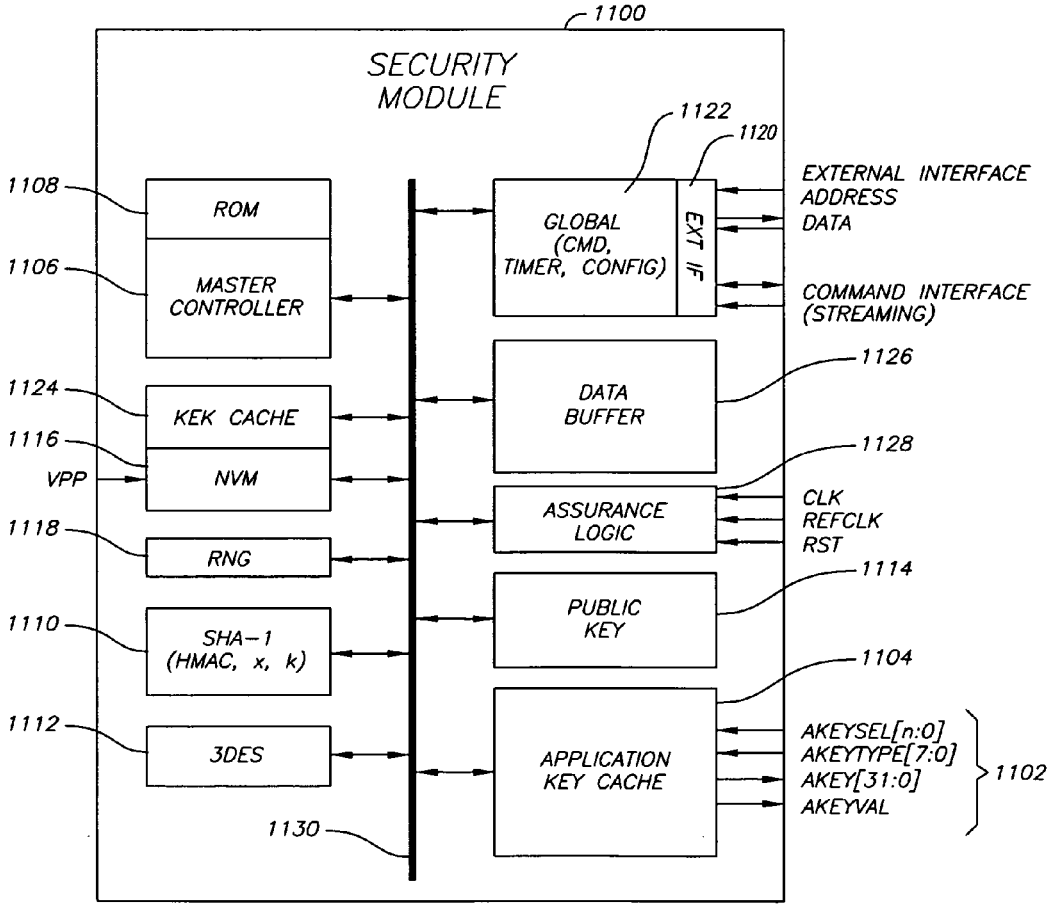
1100
SECURITY MODULE
1108
ROM
1106
MASTER CONTROLLER
1124
KEK CACHE
1116
VPP
NVM
1118
RNG
1110
SHA-1 (HMAC, x, k)
1112
3DES
1130
1122
1120
GLOBAL (CMD, TIMER, CONFIG)
EXT IF
DATA BUFFER
ASSURANCE LOGIC
PUBLIC KEY
APPLICATION KEY CACHE
EXTERNAL INTERFACE
ADDRESS
DATA
COMMAND INTERFACE (STREAMING)
1126
1128
CLK
REFCLK
RST
1114
1104
AKEYSEL[n:0]
AKEYTYPE[7:0]
AKEY[31:0]
AKEYVAL
1102