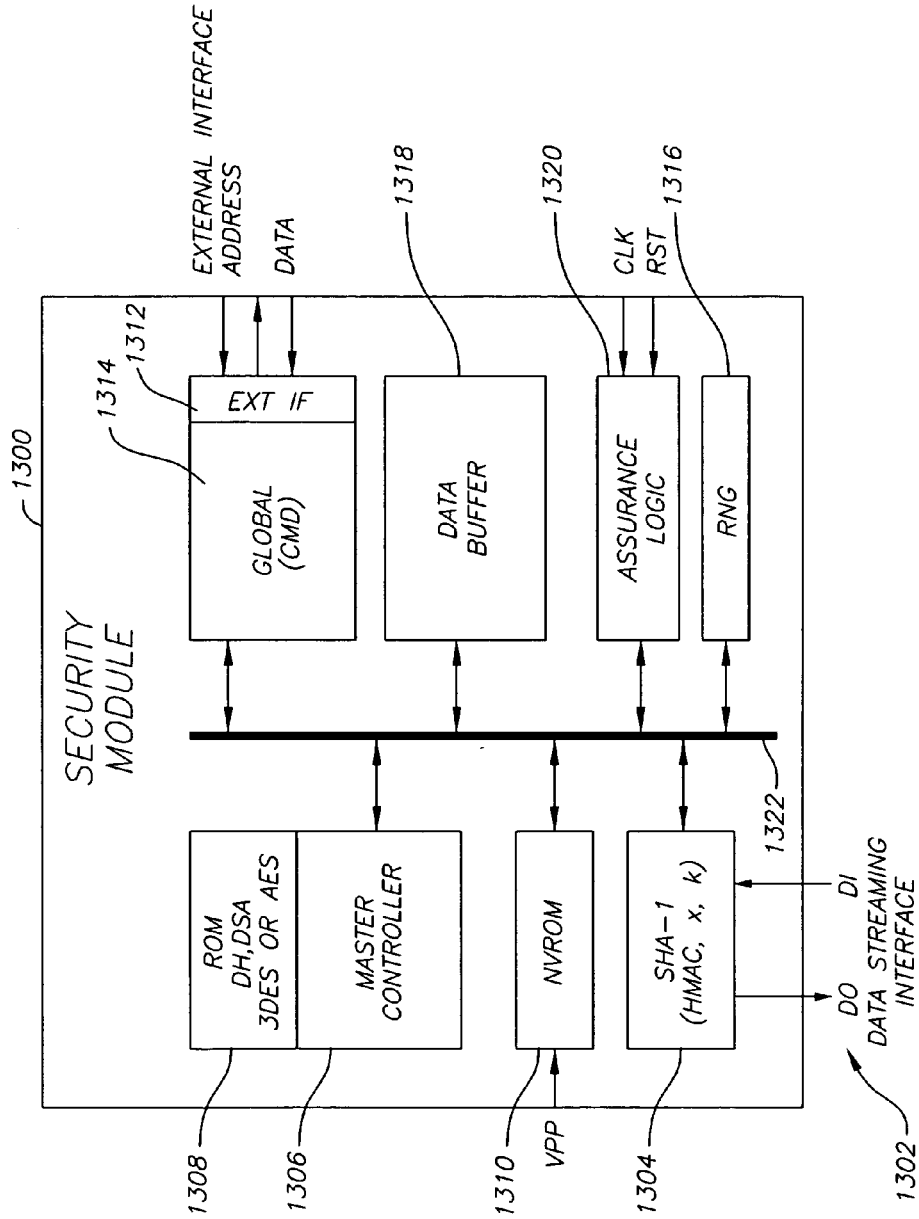
EXTERNAL INTERFACE
ADDRESS
DATA
1318
1320
CLK
RST
1316
1300
1312
1314
EXT IF
GLOBAL (CMD)
DATA BUFFER
ASSURANCE LOGIC
RNG
SECURITY MODULE
1322
ROM DH,DSA 3DES OR AES
MASTER CONTROLLER
NVROM
SHA-1 (HMAC, x, k)
DI
DO
DATA STREAMING INTERFACE
1308
1306
1310
VPP
1304
1302

FIG. 13