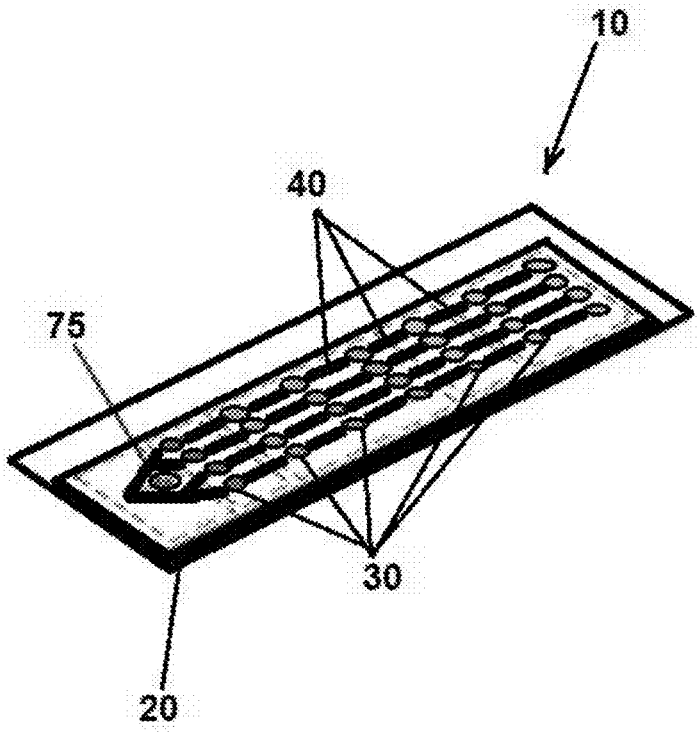

FIGURE 1E

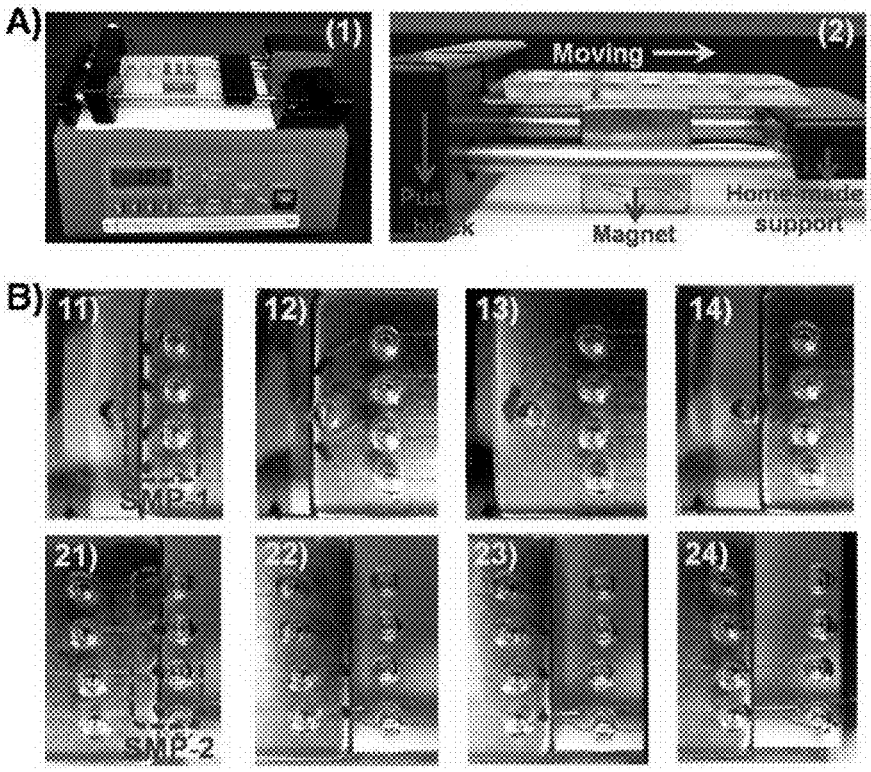

FIGURE 2A-B