FIG.2

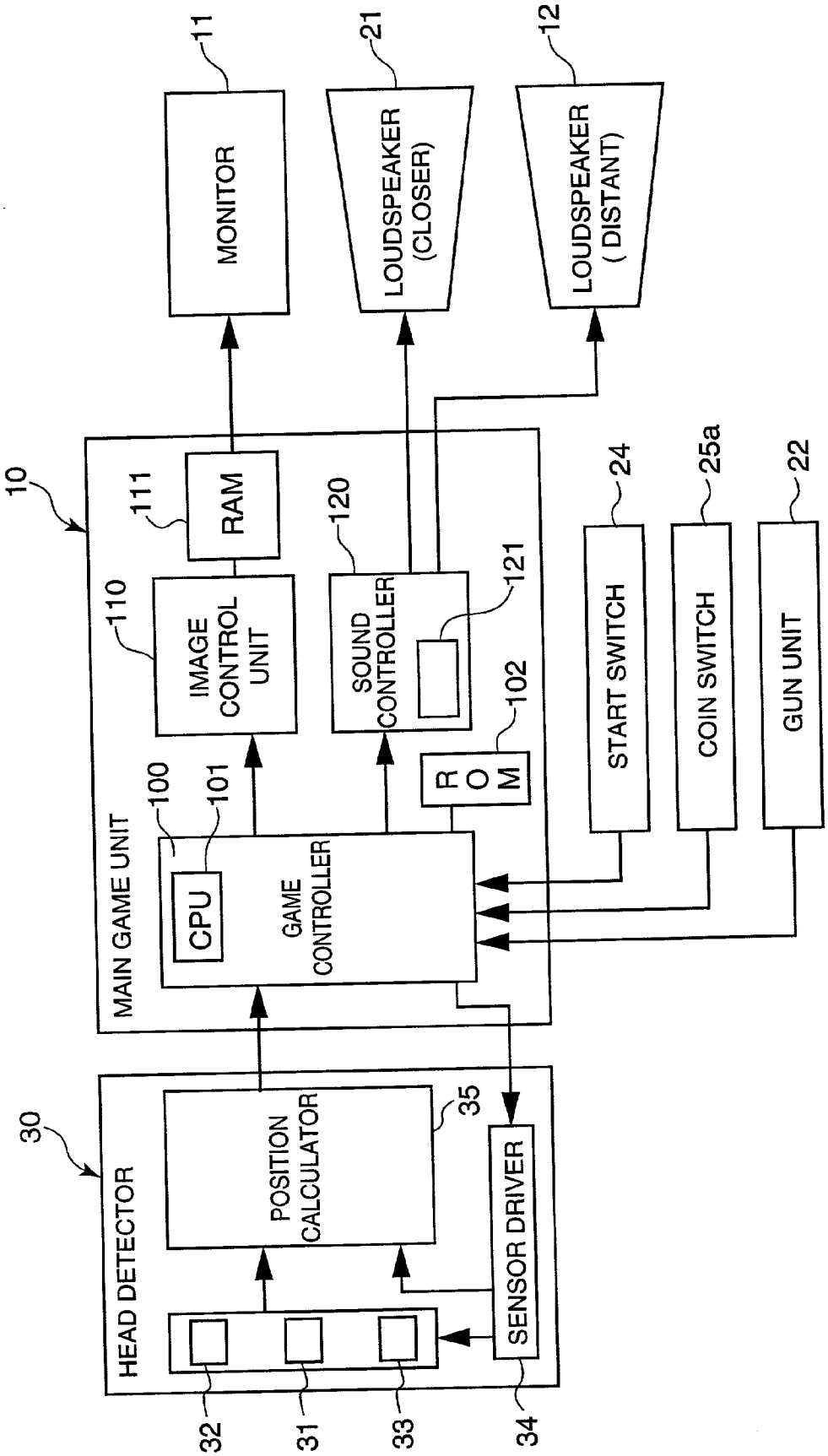
MONITOR
LOUDSPEAKER (CLOSER)
LOUDSPEAKER (DISTANT)
11
21
12
10
MAIN GAME UNIT
RAM
111
IMAGE CONTROL UNIT
110
SOUND CONTROLLER
120
121
R O M
102
CPU
100
101
GAME CONTROLLER
START SWITCH
24
COIN SWITCH
25a
GUN UNIT
22
30
HEAD DETECTOR
POSITION CALCULATOR
35
SENSOR DRIVER
32
31
33
34