FIG.3

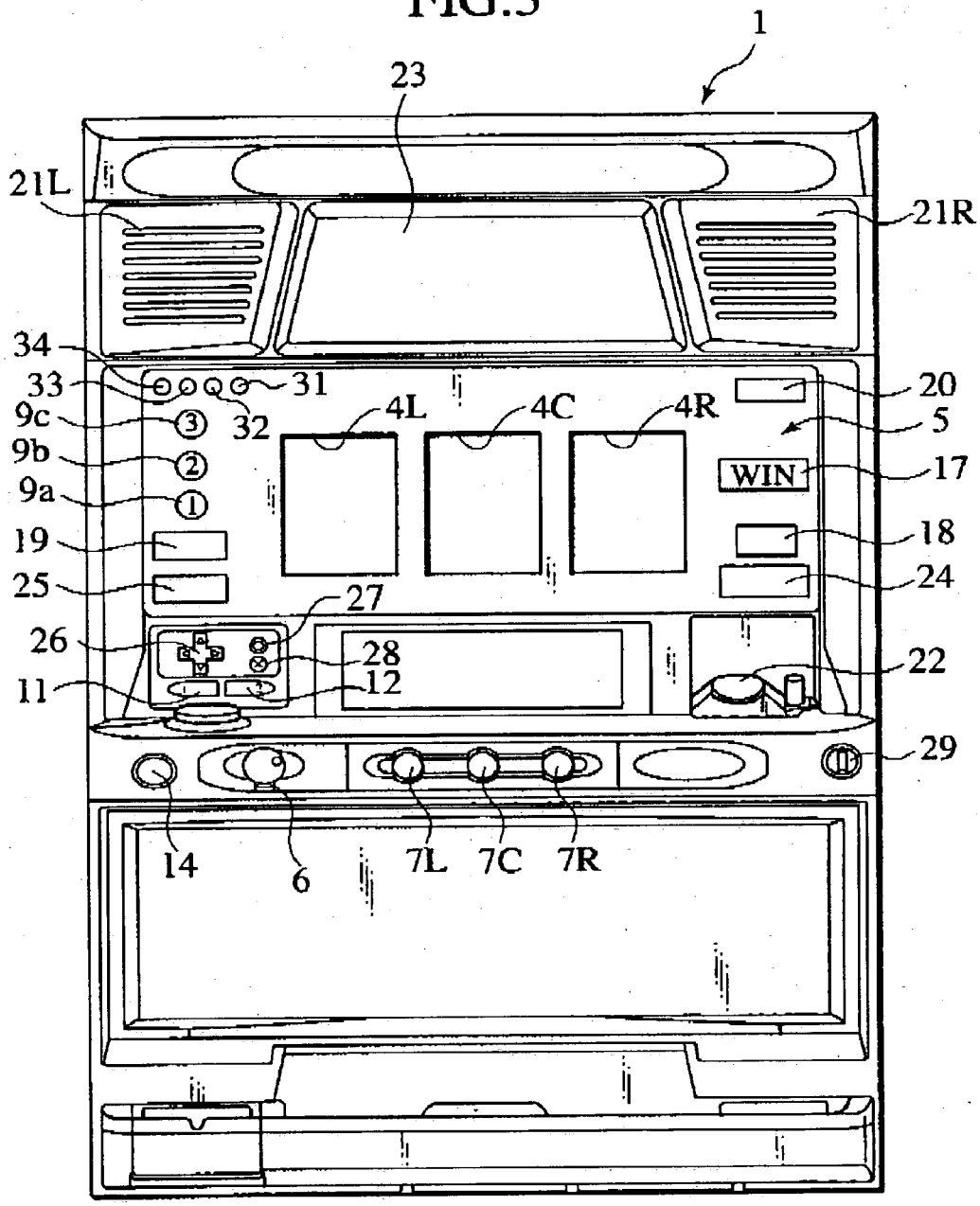
1
23
21L
21R
34
33
31
32
9c
9b
9a
4L
4C
4R
20
5
WIN
17
18
24
19
25
27
26
28
12
11
22
29
14
6
7L
7C
7R