FIG. 4

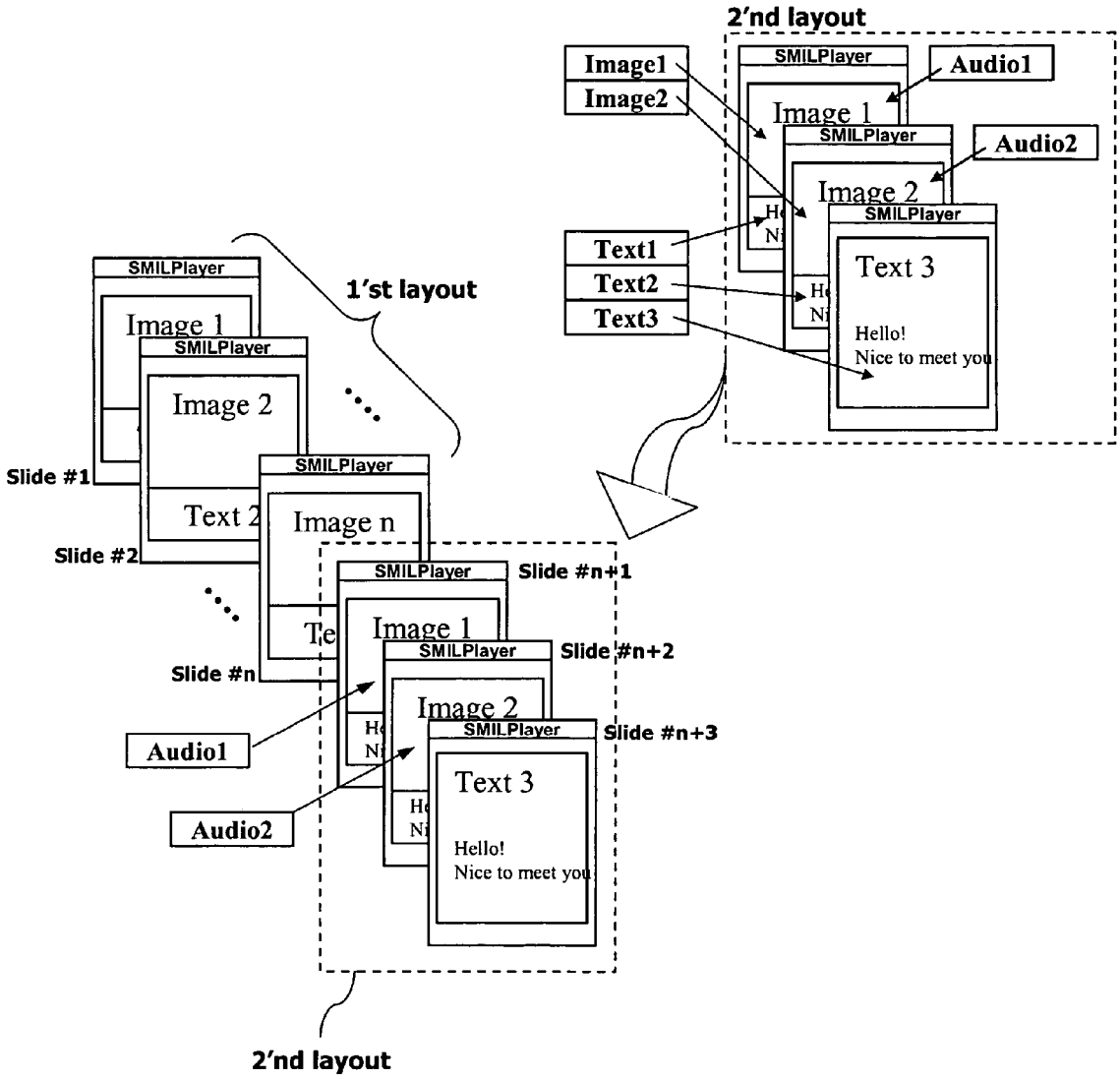
2'nd layout
Image1
Image2
SMILPlayer
Audio1
Image 1
SMILPlayer
Audio2
Image 2
SMILPlayer
Text1
Text2
Text3
Text 3
Hello!
Nice to meet you
1'st layout
SMILPlayer
Image 1
SMILPlayer
Image 2
Slide #1
SMILPlayer
Text 2
Image n
Slide #2
Slide #n
SMILPlayer
Slide #n+1
Image 1
SMILPlayer
Slide #n+2
Image 2
SMILPlayer
Slide #n+3
Audio1
Audio2
Text 3
Hello!
Nice to meet you
2'nd layout