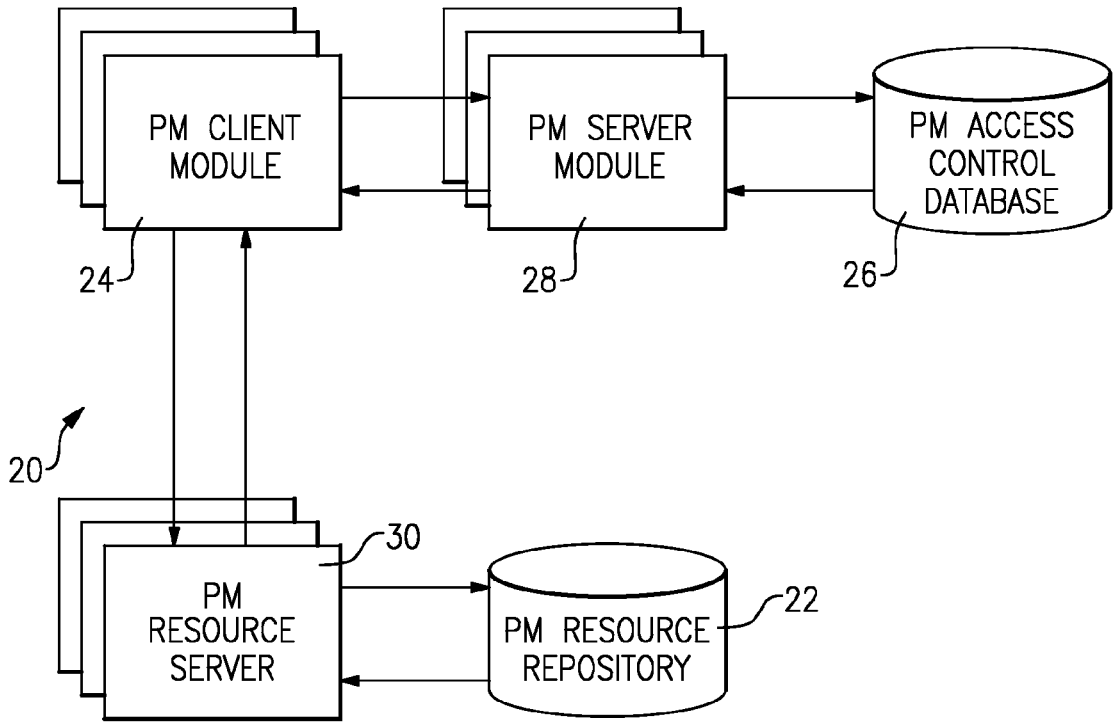
PM CLIENT MODULE
PM SERVER MODULE
PM ACCESS CONTROL DATABASE
24
28
26
20
30
PM RESOURCE SERVER
PM RESOURCE REPOSITORY
22

FIG.1