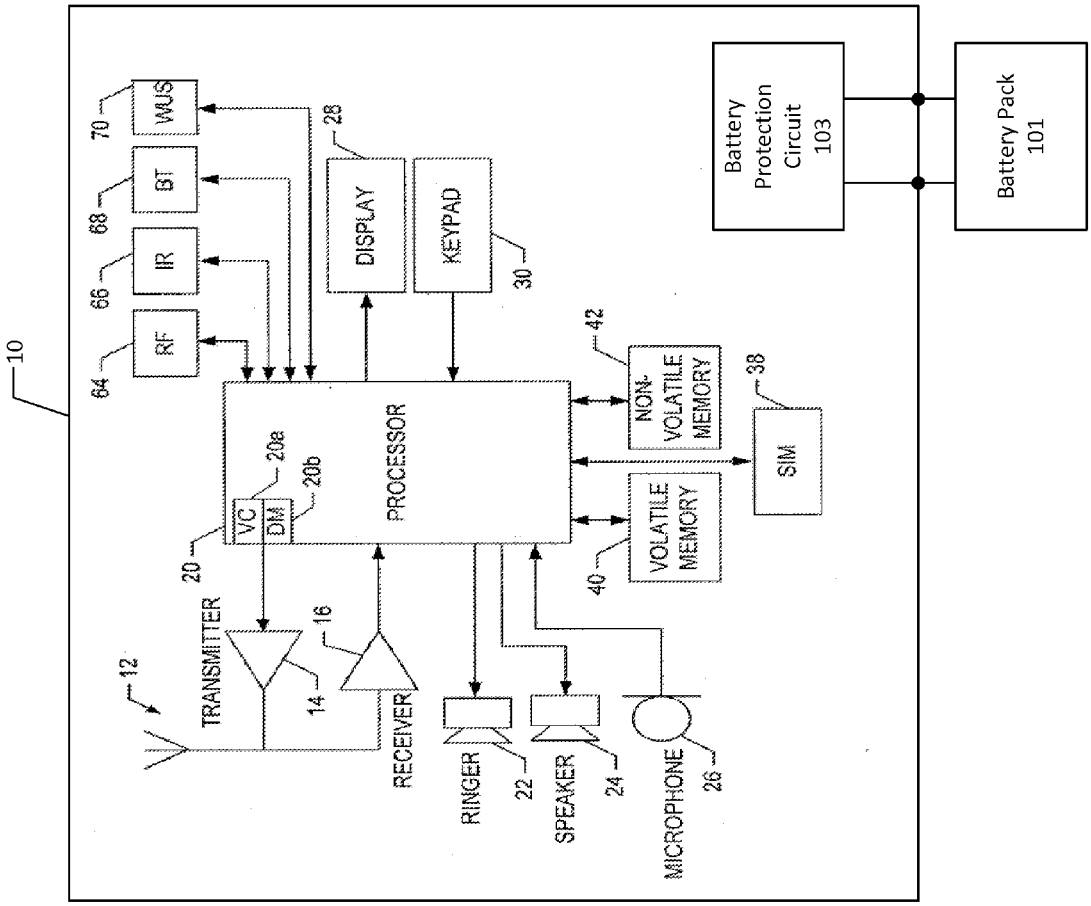
10
12
TRANSMITTER
14
16
RECEIVER
20
VC
DM
20a
20b
PROCESSOR
RF
64
IR
66
BT
68
WUS
70
28
DISPLAY
KEYPAD
30
RINGER
22
SPEAKER
24
MICROPHONE
26
VOLATILE MEMORY
40
NON-VOLATILE MEMORY
42
SIM
38
Battery Protection Circuit 103
Battery Pack 101

FIG. 1