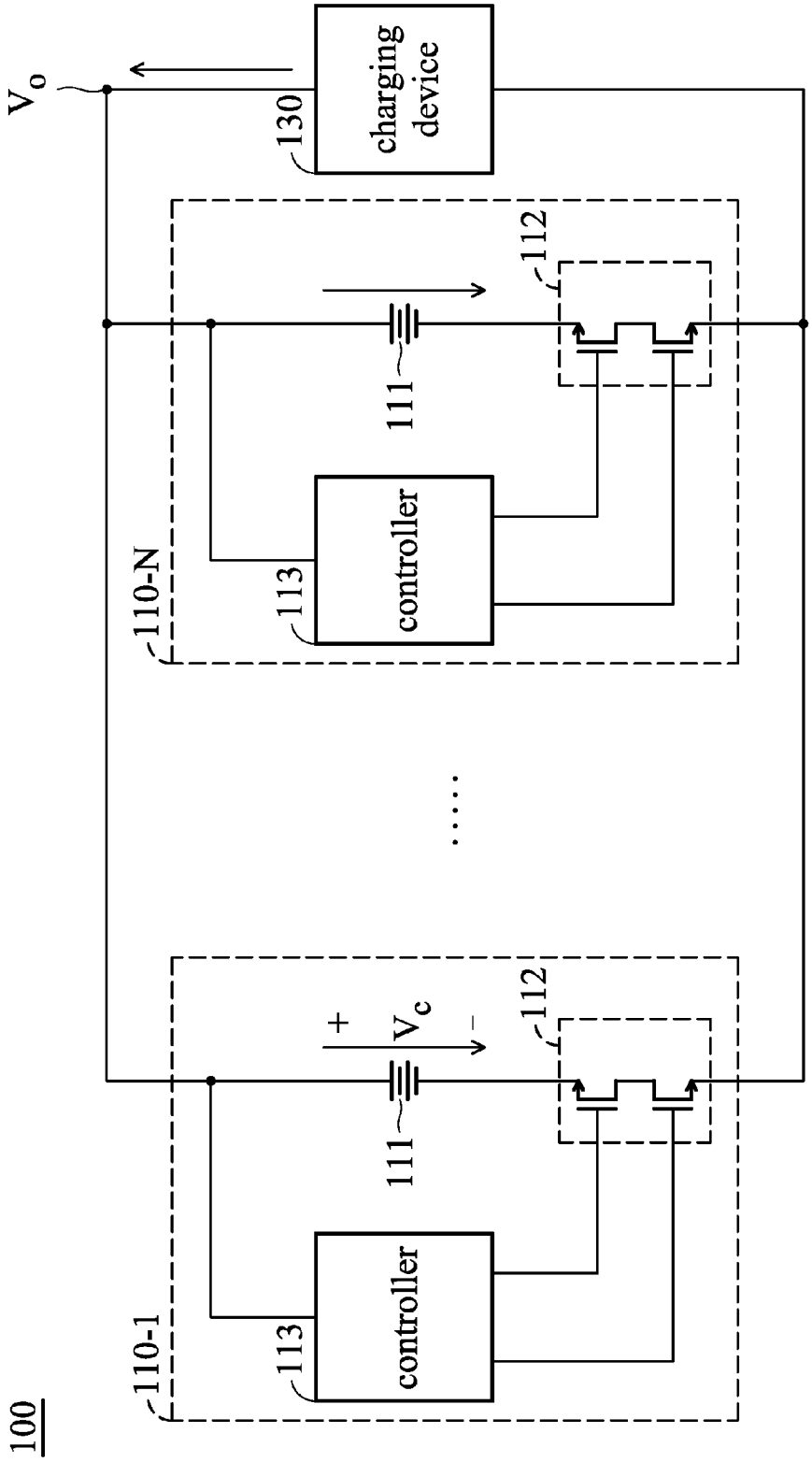
100
110-1
113
controller
111
+
V_c
-
112
.....
110-N
113
controller
111
112
130
charging device
V_o

FIG. 1B