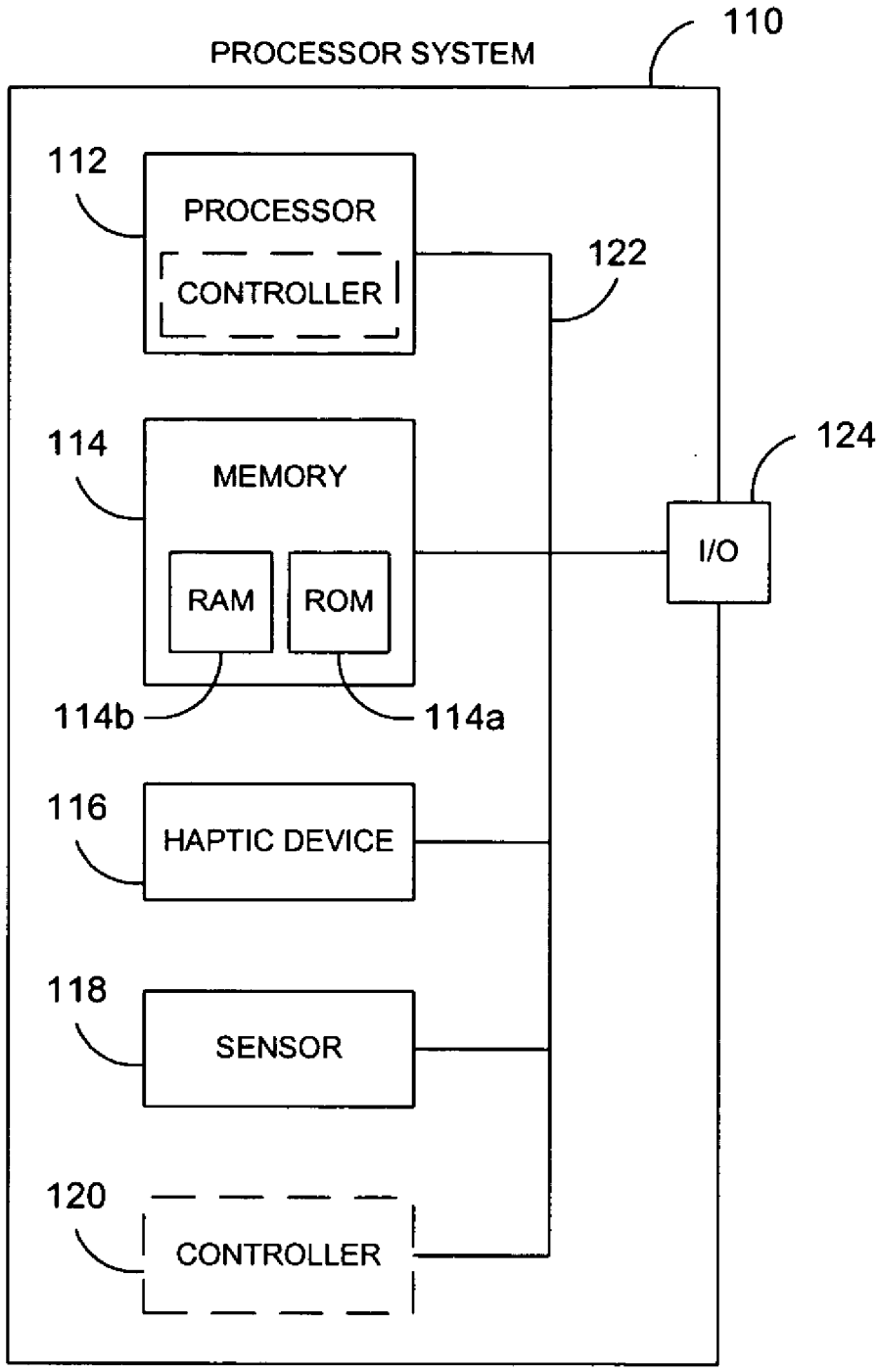
110
PROCESSOR SYSTEM
112
PROCESSOR
CONTROLLER
122
114
MEMORY
RAM
ROM
114b
114a
124
I/O
116
HAPTIC DEVICE
118
SENSOR
120
CONTROLLER

Fig. 1