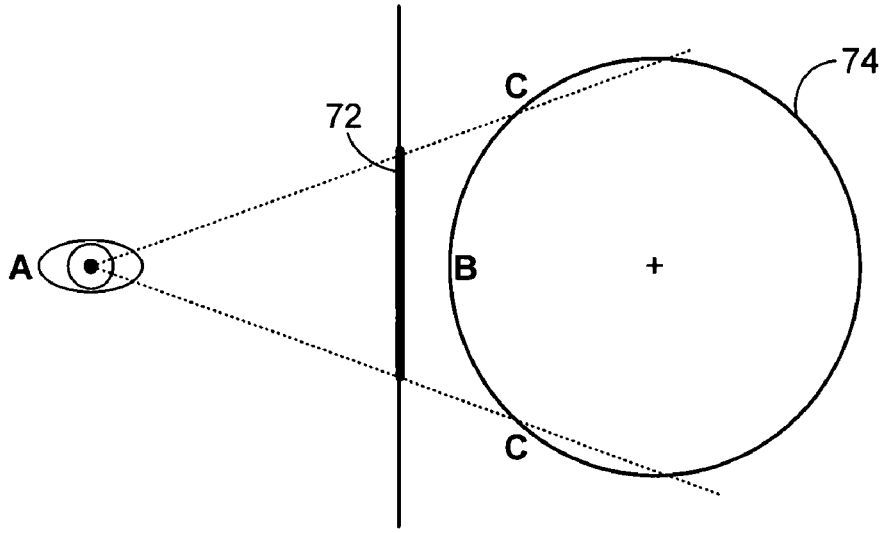

Figure 1C

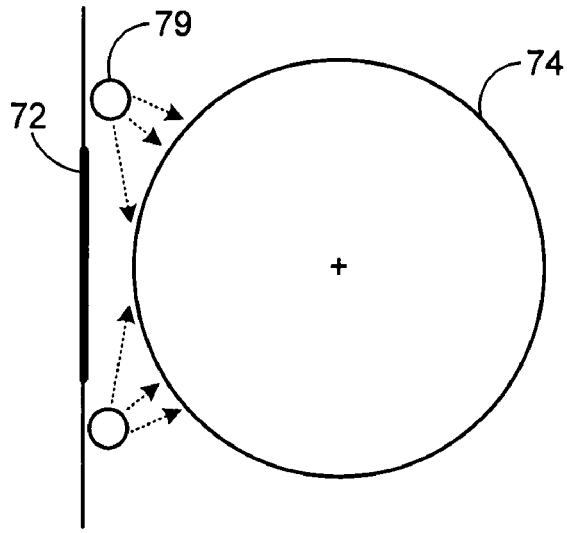

Figure 1D