FIG. 2

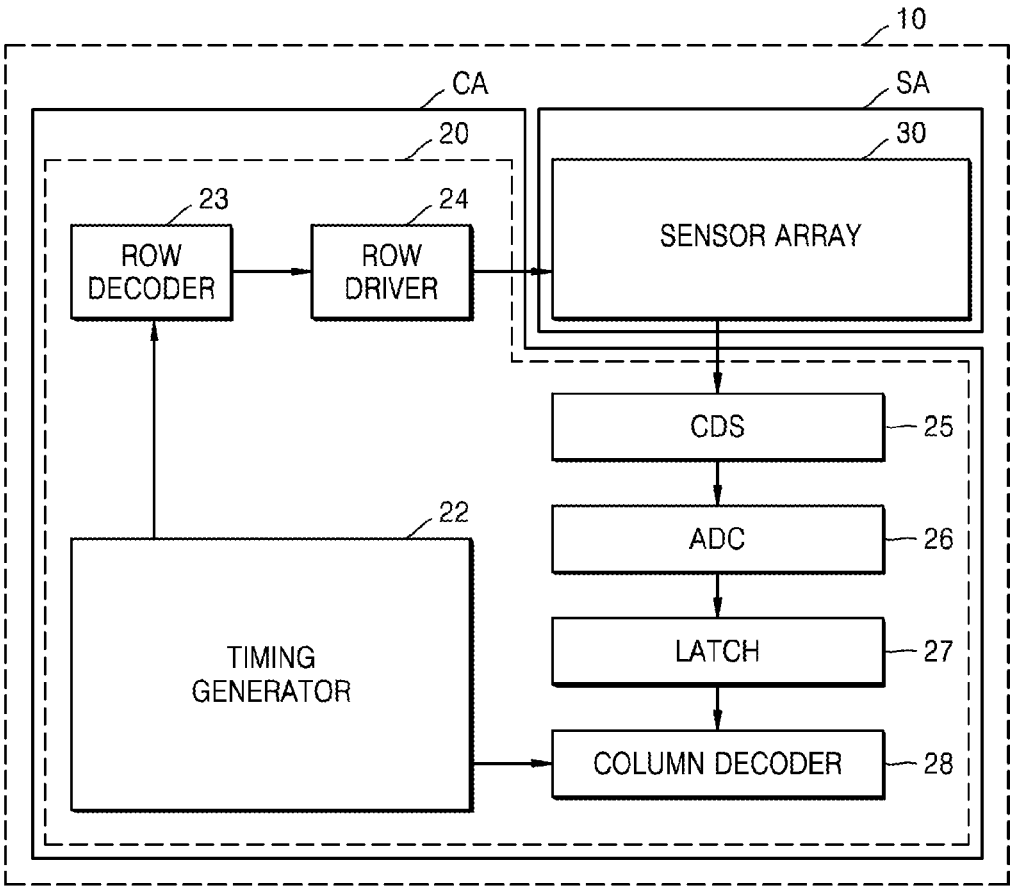
10
CA
SA
20
30
23
24
ROW DECODER
ROW DRIVER
SENSOR ARRAY
CDS
25
22
ADC
26
TIMING GENERATOR
LATCH
27
COLUMN DECODER
28