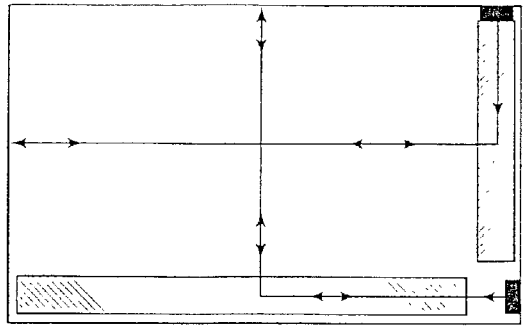

Fig. 5 Prior Art

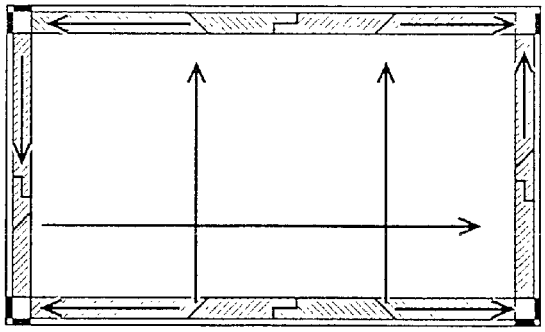

Fig. 6b

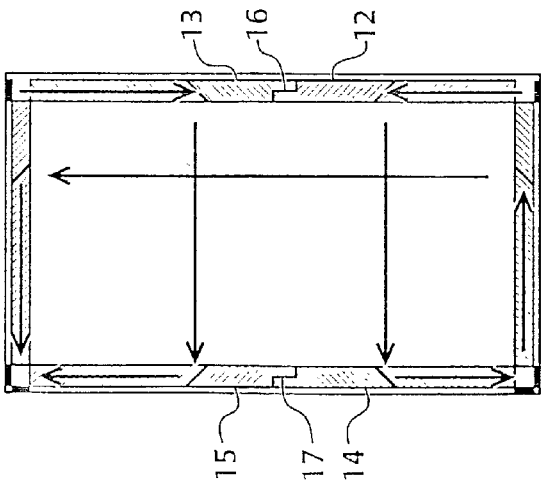

Fig. 6a Prior Art

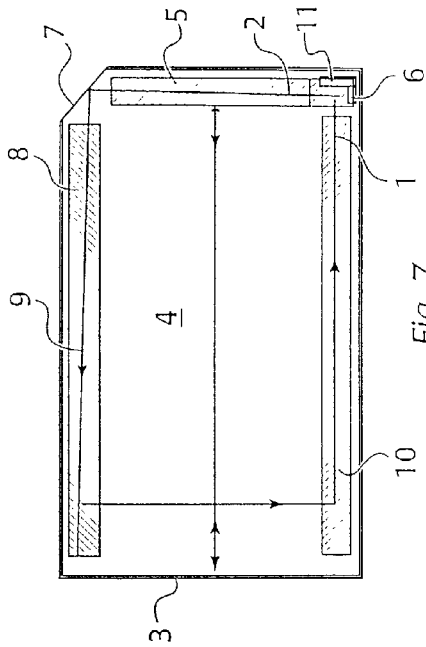

Fig. 7

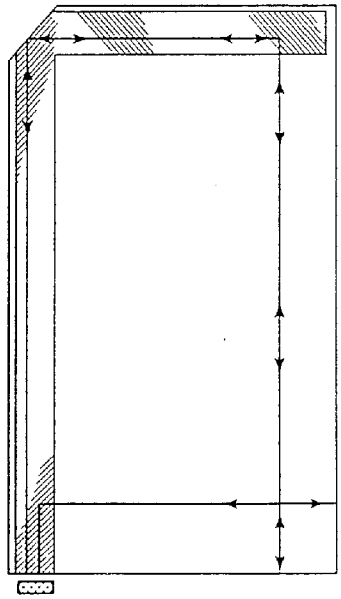

Fig. 8 Prior Art