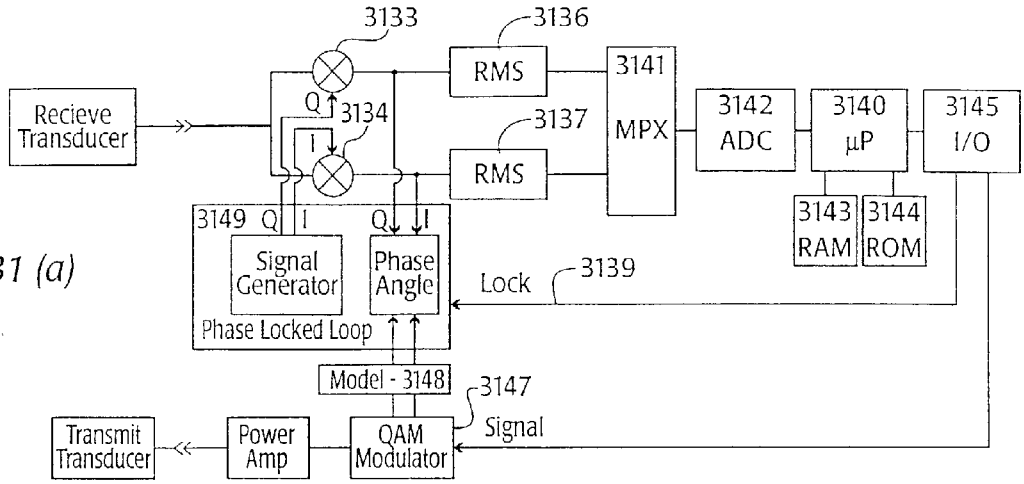

Fig. 31 (a)

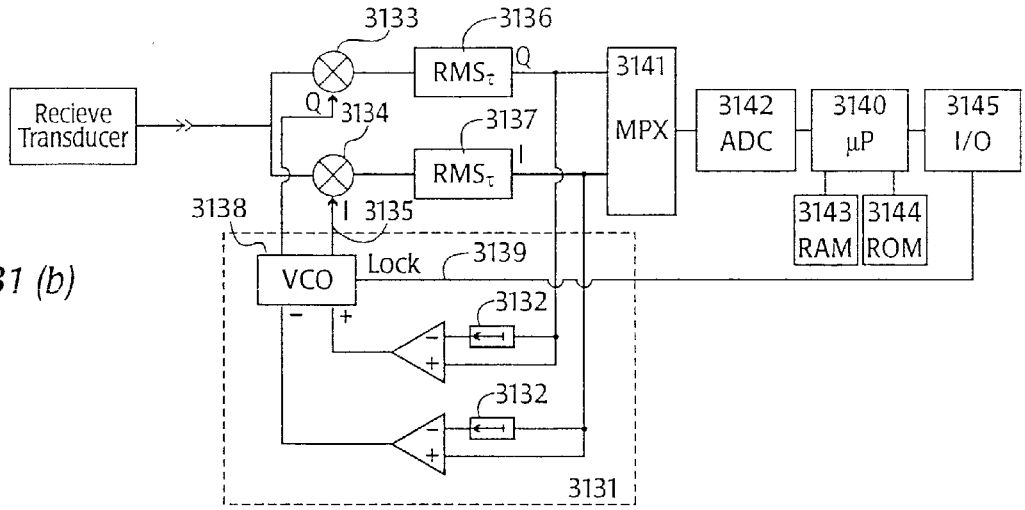

Fig. 31 (b)

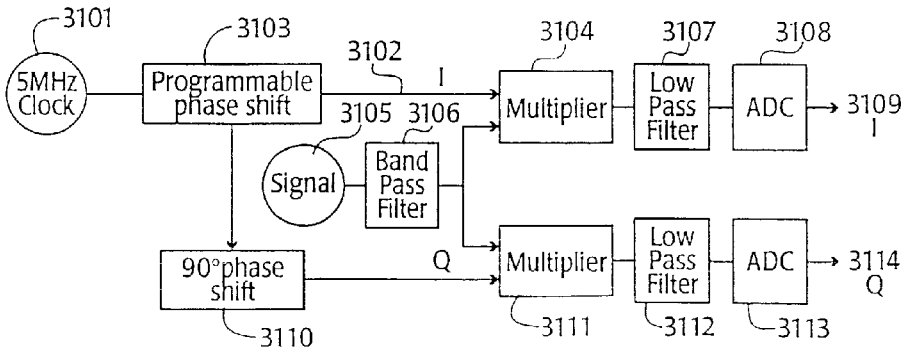

Fig. 31 (c)