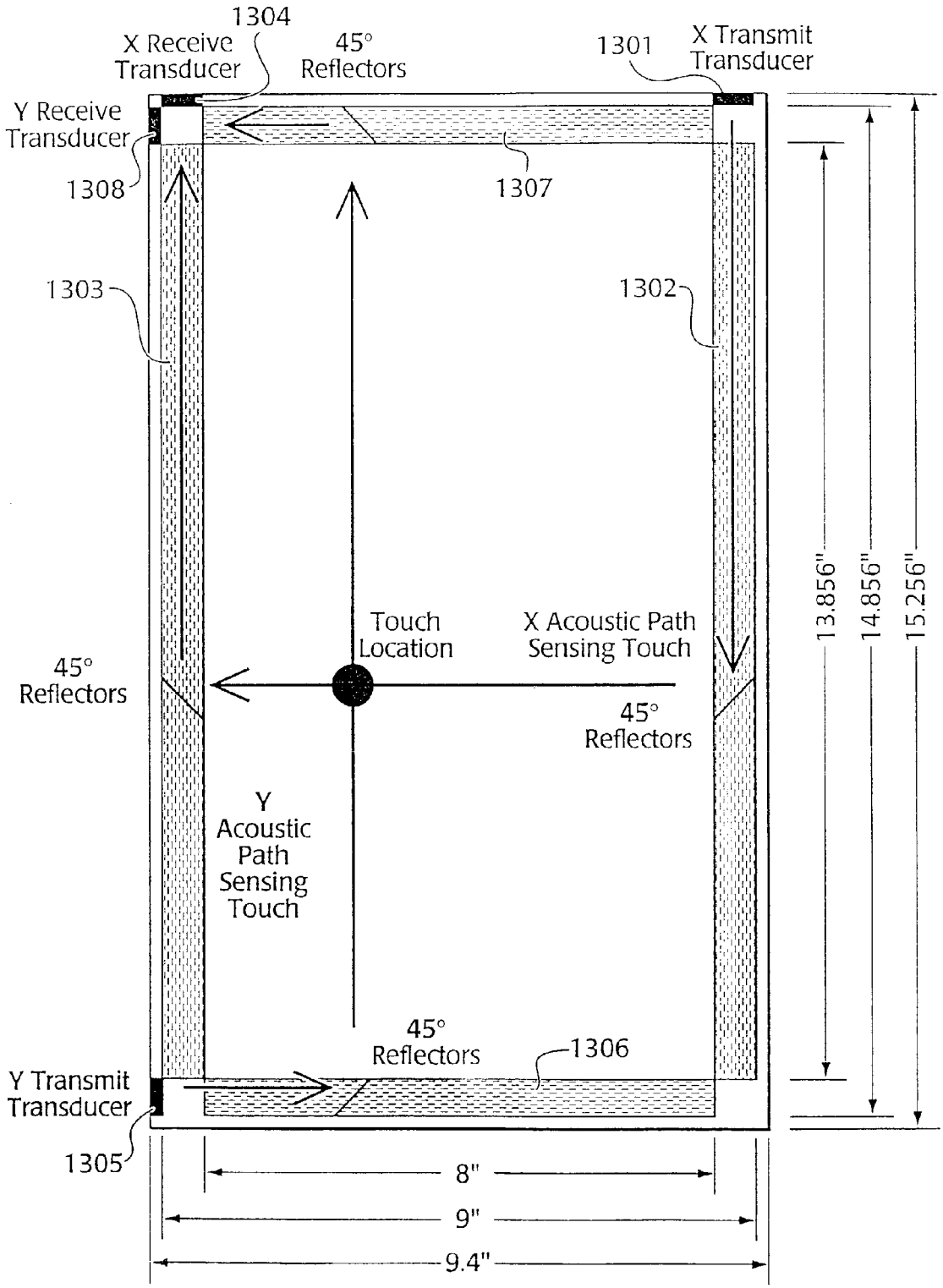

Figure 13 - X, Y, 30° Sensor: (a) X & Y Subsystems