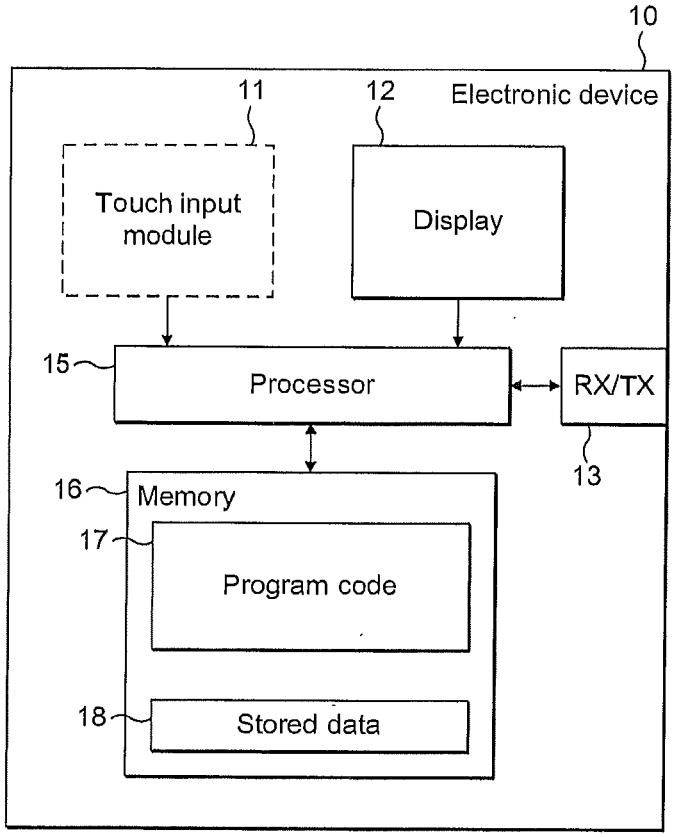
10
Electronic device
11
12
Touch input module
Display
15
Processor
RX/TX
13
16
Memory
17
Program code
18
Stored data

FIG. 1