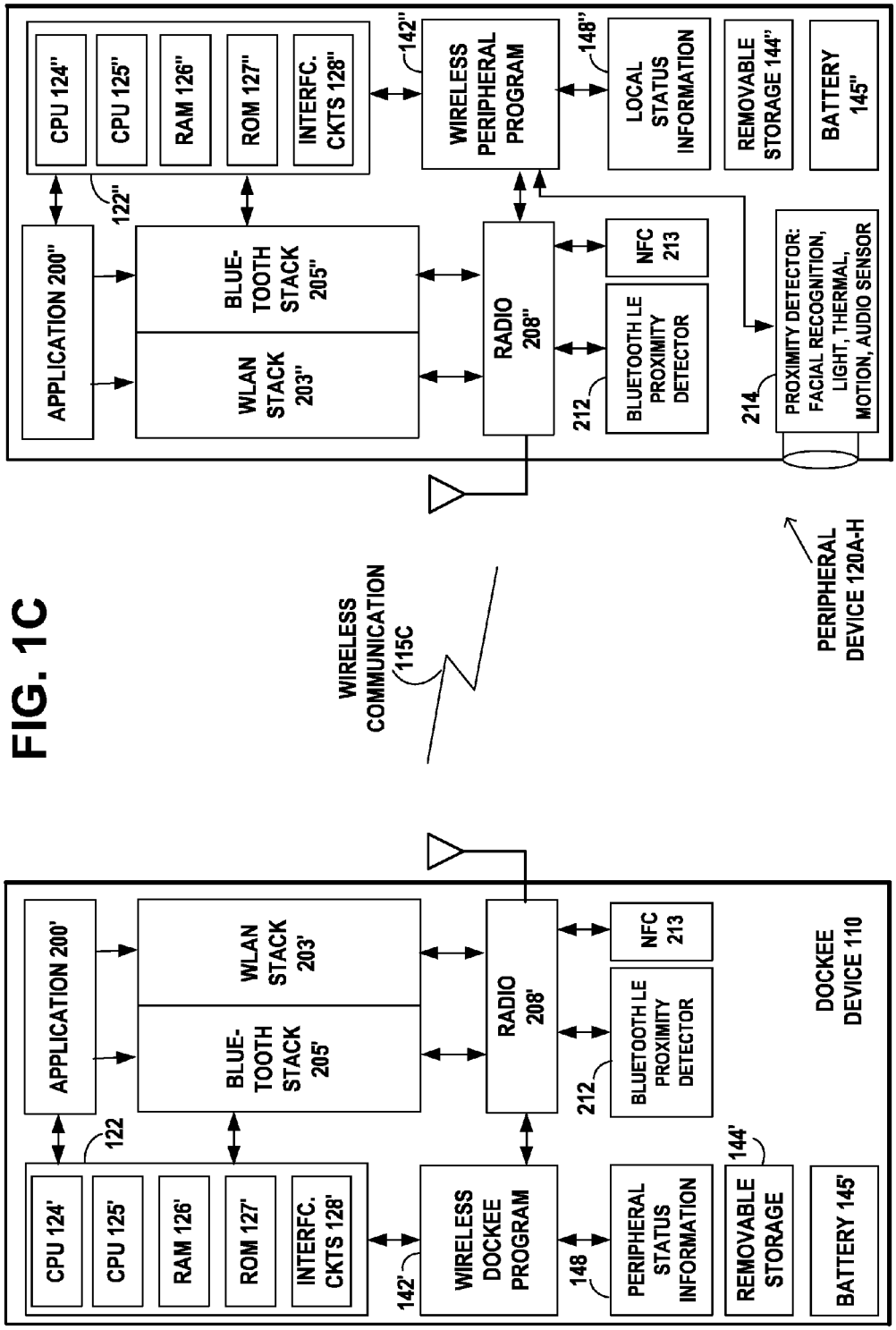
APPLICATION 200'
CPU 124'
CPU 125'
RAM 126'
ROM 127'
INTERFC. CKTS 128'
122
WLAN STACK 203'
BLUE-TOOTH STACK 205'
RADIO 208'
NFC 213
BLUETOOTH LE PROXIMITY DETECTOR
212
DOCKEE DEVICE 110
142'
WIRELESS DOCKEE PROGRAM
148
PERIPHERAL STATUS INFORMATION
144'
REMOVABLE STORAGE
BATTERY 145'
WIRELESS COMMUNICATION 115C
APPLICATION 200"
CPU 124"
CPU 125"
RAM 126"
ROM 127"
INTERFC. CKTS 128"
122"
BLUE-TOOTH STACK 205"
WLAN STACK 203"
RADIO 208"
142"
WIRELESS PERIPHERAL PROGRAM
148"
LOCAL STATUS INFORMATION
REMOVABLE STORAGE 144"
BATTERY 145"
NFC 213
BLUETOOTH LE PROXIMITY DETECTOR
212
PROXIMITY DETECTOR: FACIAL RECOGNITION, LIGHT, THERMAL, MOTION, AUDIO SENSOR
214
PERIPHERAL DEVICE 120A-H

FIG. 1C